Physical Programming with Arduino

Some sample projects…

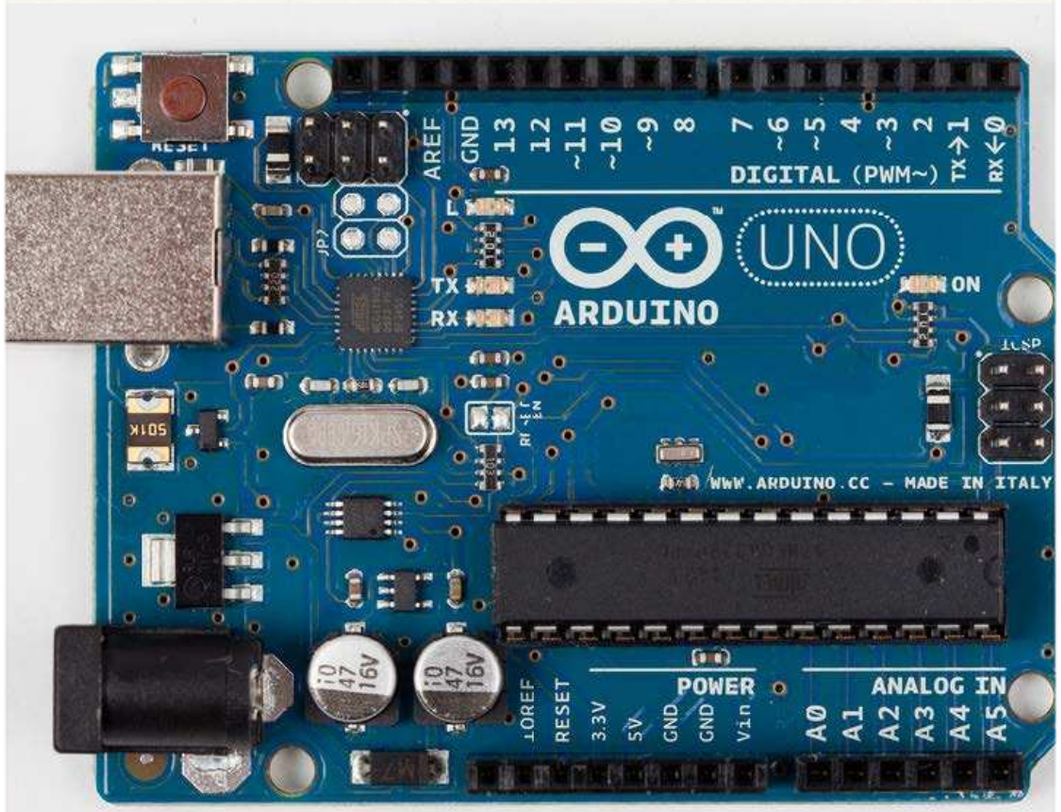

Arduino Uno - Arduino Leonardo look-alike

The Board

Arduino Uno and its cheap cousin from Borderless Electronics

Mini - Breadboard

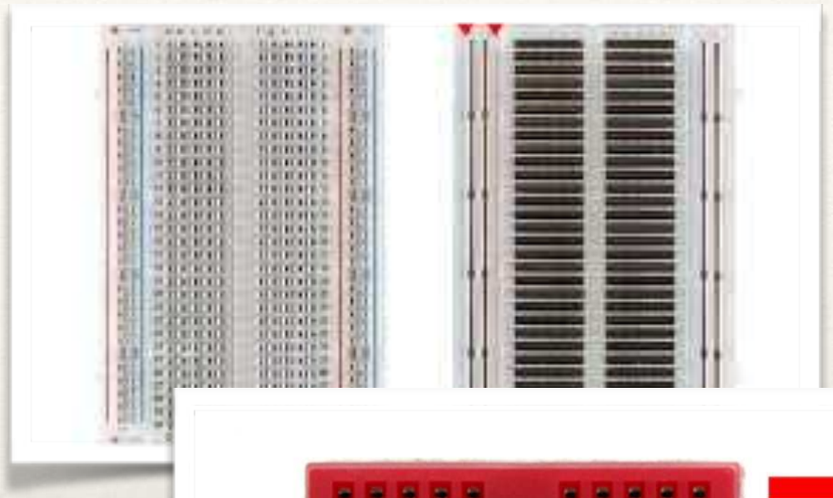

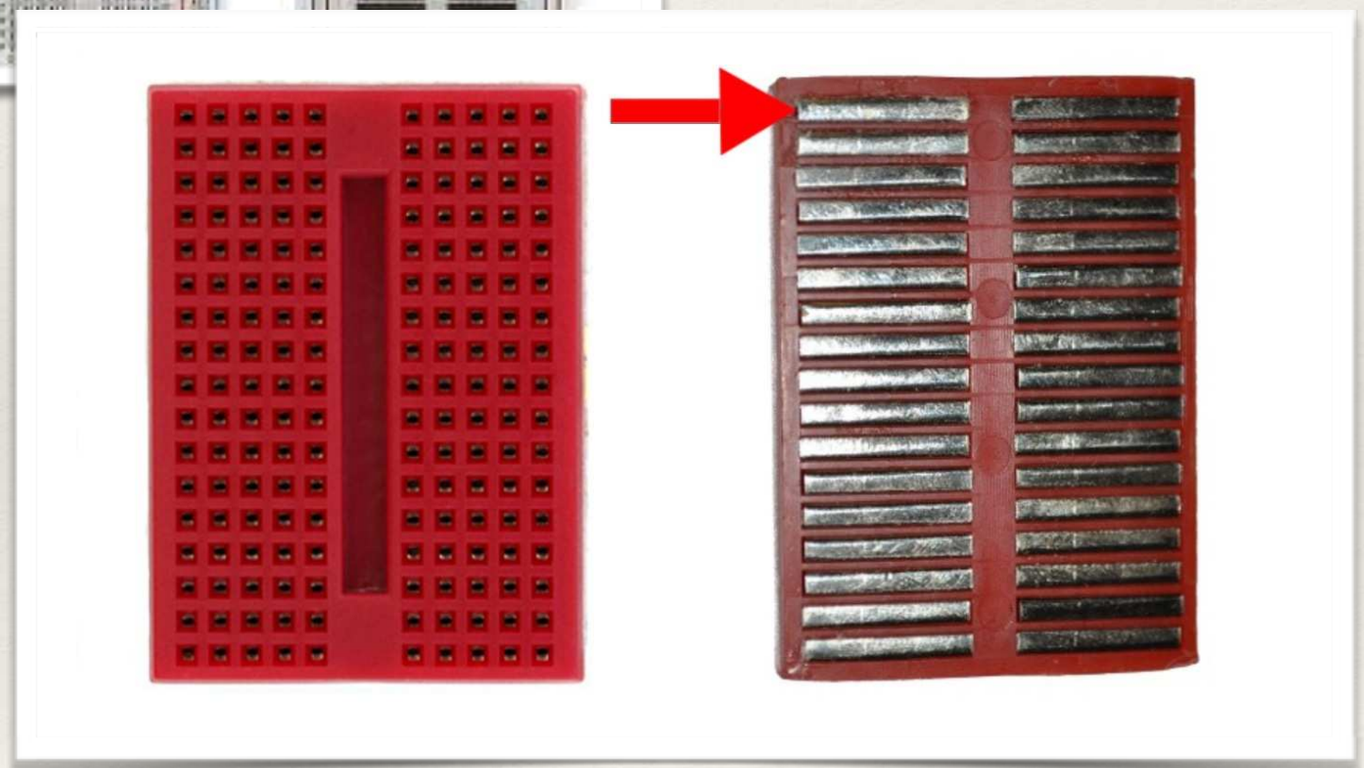

- typical solderless breadboard has side rails for positive and ground…
- mini breadboards are without rails

If you're designing circuits, you may be…

Fritzing

http://fritzing.org/home/

Used to create breadboard diagrams - free and open source

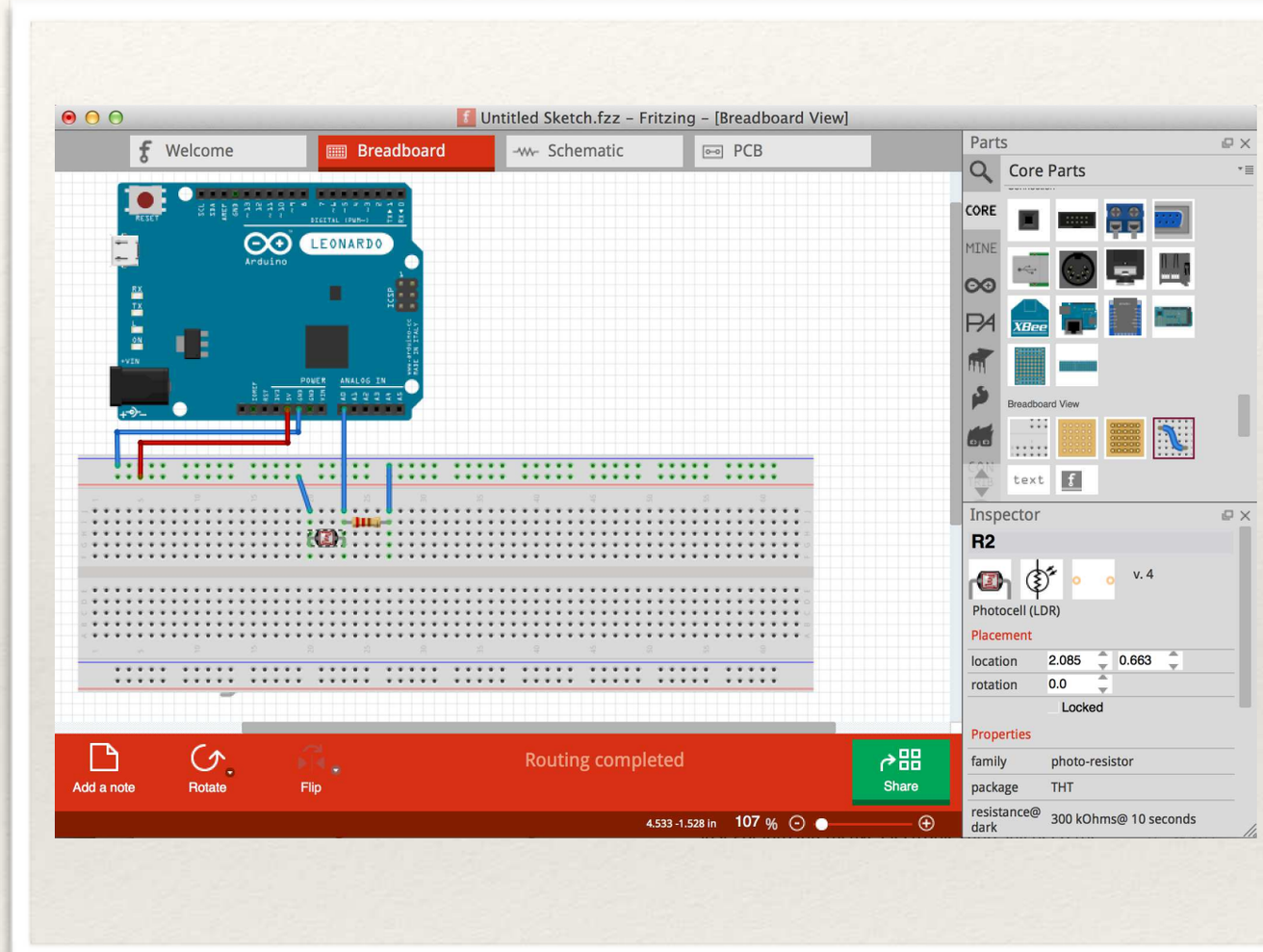

Based on Processing…

Arduino IDE

Language based on C/C++(Wiring)
Based on Processing IDE
    Processing: setup() and draw()
    Arduino: setup() and loop()
TONS of examples:

- http://arduino.cc/en/Tutorial/HomePage
- https://learn.adafruit.com/

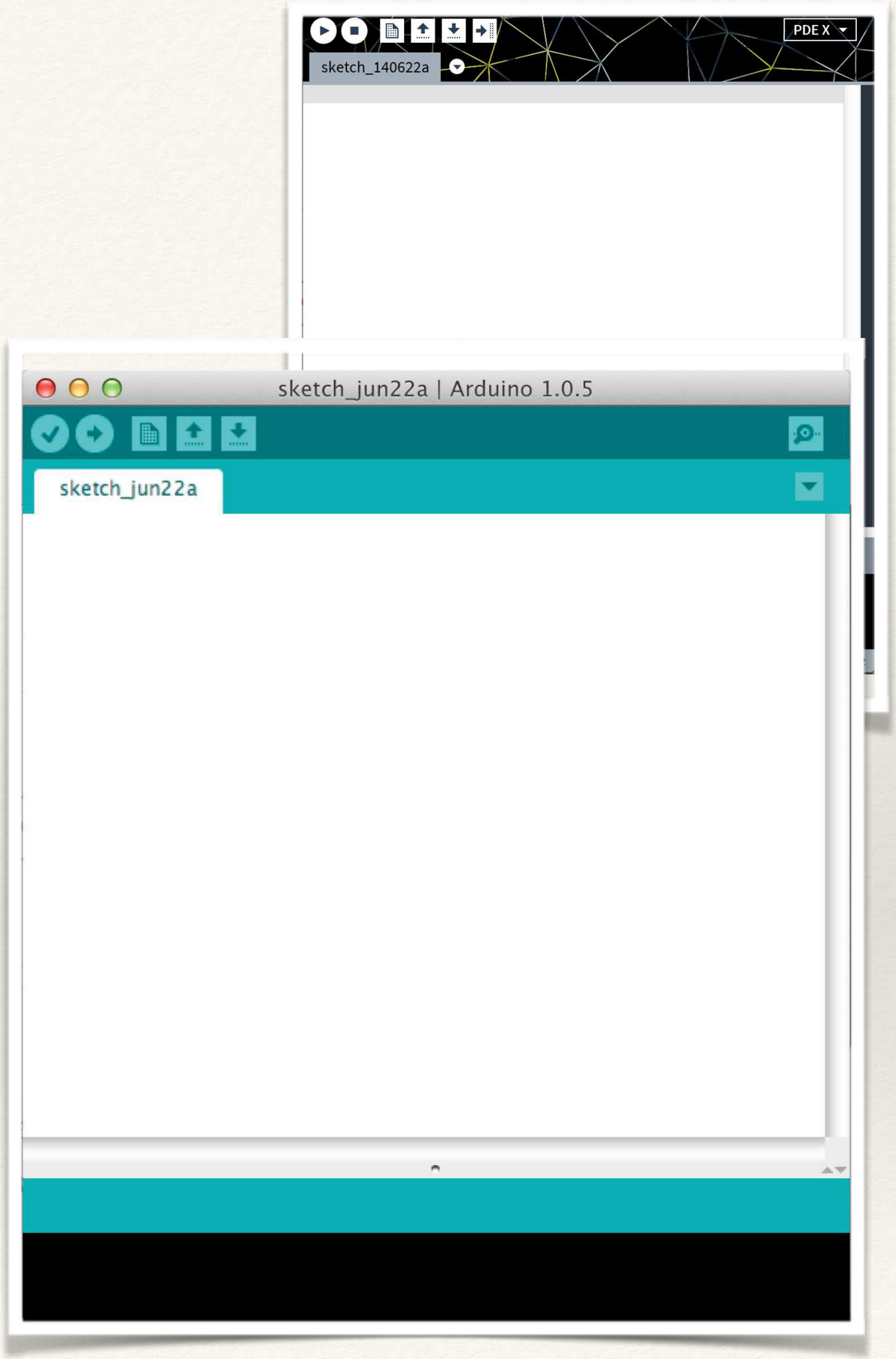

Some Basics…

Compile/Download

Select Tools>Board>Leonardo

Select File>Examples> whichever

Select ‘Check’ for compile

Select ‘Arrow’ to download to board

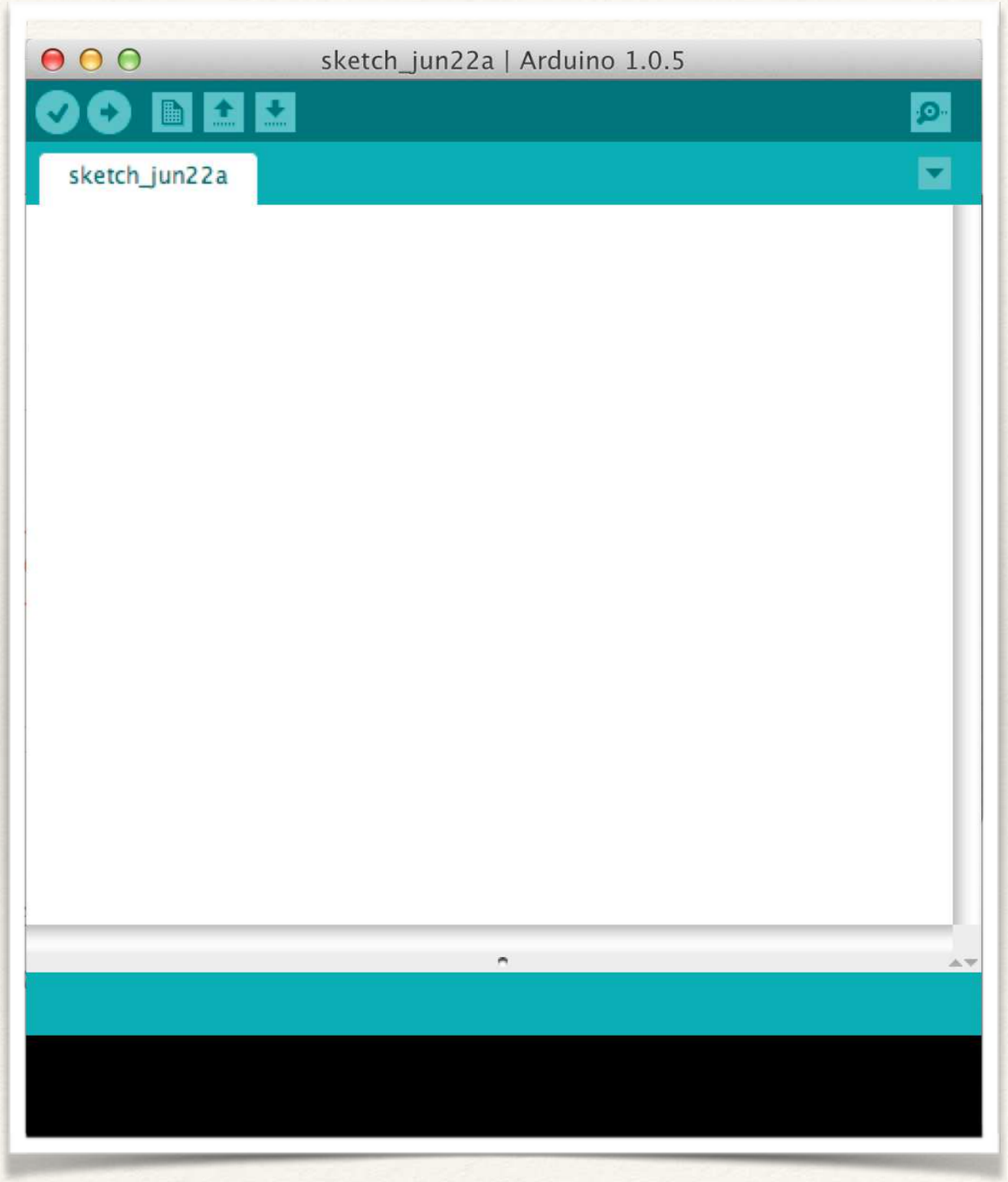

Blink (Arduino's Hello World)

```
/*
  Blink
  Turns on an LED on for one second, then off for one second,
repeatedly.
  This example code is in the public domain.
 */

// Pin 13 has an LED connected on most Arduino boards and
// already has a resistor built in. Otherwise put resistor in
// give it a name:

int led = 13;

// the setup routine runs once when you press reset:
void setup() {
  // initialize the digital pin as an output.
  pinMode(led, OUTPUT);
}

// the loop routine runs over and over again forever:
void loop() {
  digitalWrite(led, HIGH);   // turn the LED on
  delay(1000);               // wait for a second
  digitalWrite(led, LOW);    // turn the LED off
  delay(1000);               // wait for a second
}
```

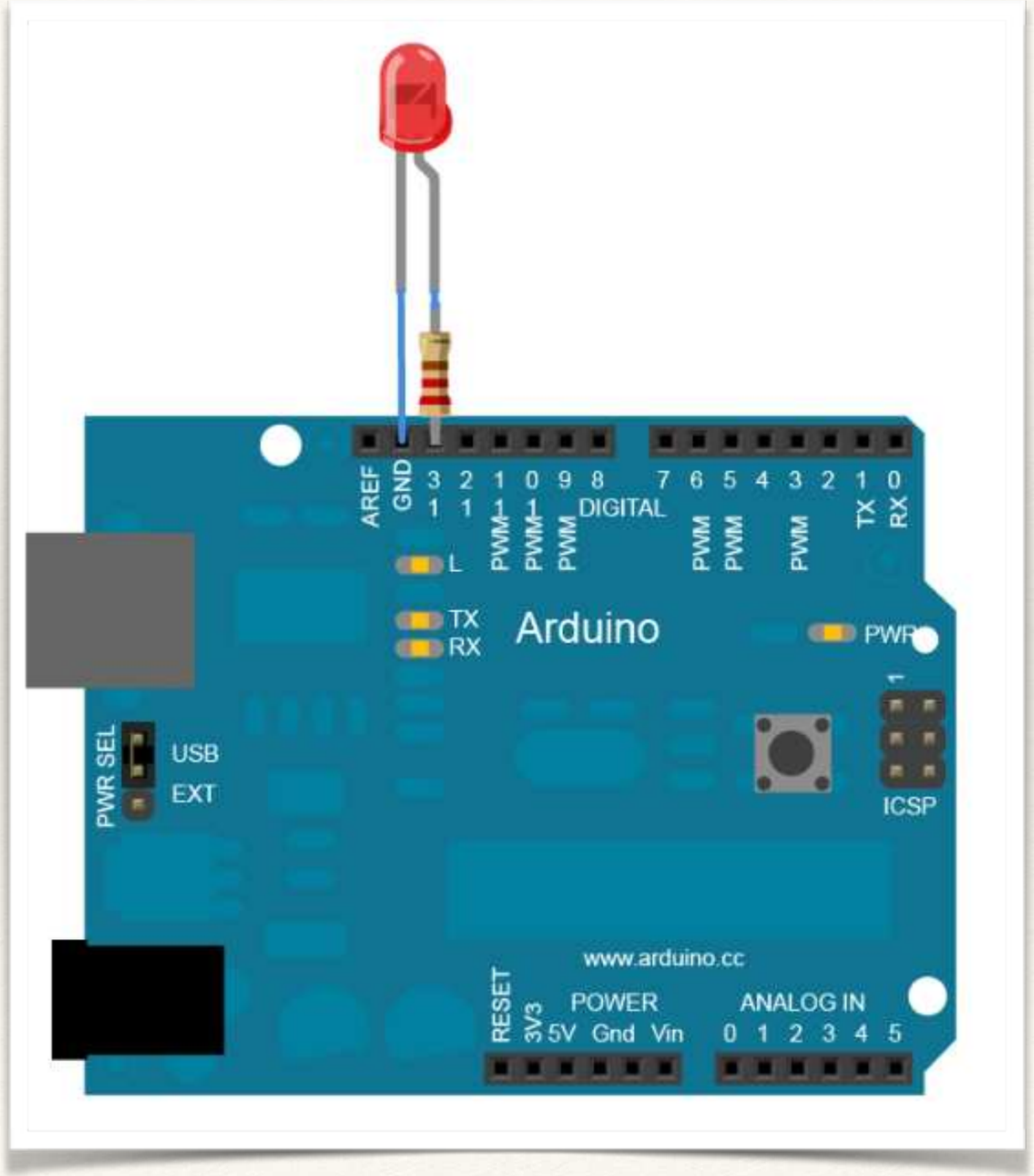

Light Sensing

```
/*
  Photoresistor
  Turns on an LED on when light level is below threshold. Open
the serial monitor to see the light values Tools>Serial Monitor

 */


int led = 11;
int lightPin = 0;

// the setup routine runs once when you press reset:
void setup() {
  // initialize the digital pin as an output.
  Serial.begin(9600);
  pinMode(led, OUTPUT);
}

// the loop routine runs over and over again forever:
void loop() {
  Serial.println(analogRead(lightPin));   // turn the LED on
(HIGH is the voltage level)
  delay(100);                    // wait for a second
  if (analogRead(lightPin)>900){
     digitalWrite(led, HIGH); }   // turn the LED off by
//                                  making the voltage HIGH

   else{
      digitalWrite(led, LOW);
}
}
```

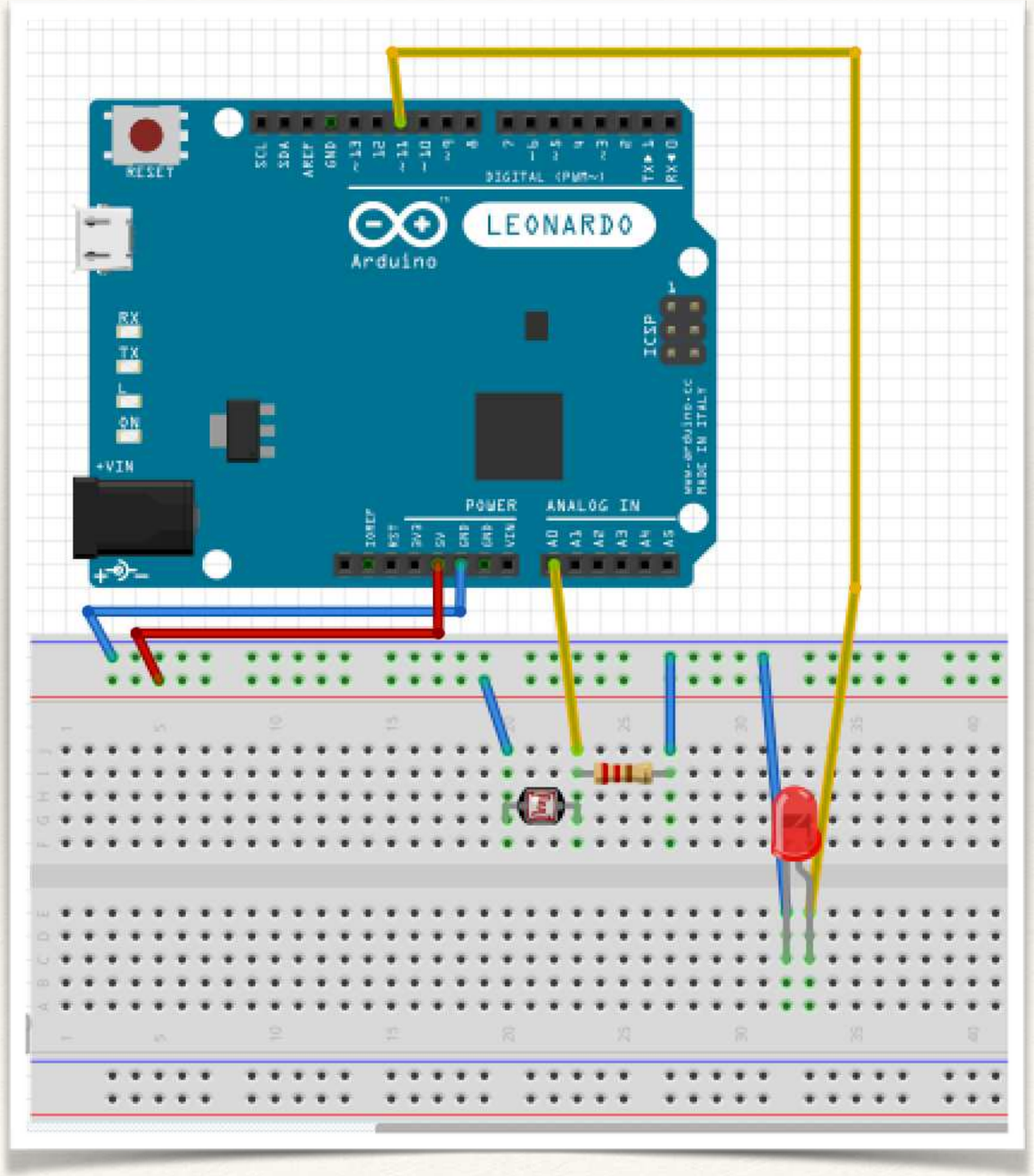

Piezo Speaker

```
/*
  Melody

 Plays a melody

 circuit:
 * 8-ohm speaker on digital pin 8

 */
 #include "pitches.h"

// notes in the melody:
int melody[] = {
  NOTE_C4, NOTE_G3,NOTE_G3, NOTE_A3, NOTE_G3,0, NOTE_B3, NOTE_C4};

// note durations: 4 = quarter note, 8 = eighth note, etc.:
int noteDurations[] = {
  4, 8, 8, 4,4,4,4,4 };

void setup() {
  // iterate over the notes of the melody:
  for (int thisNote = 0; thisNote < 8; thisNote++) {

    // to calculate the note duration, take one second
    // divided by the note type.
    //e.g. quarter note = 1000 / 4, eighth note = 1000/8, etc.
    int noteDuration = 1000/noteDurations[thisNote];
    tone(8, melody[thisNote],noteDuration);

    // to distinguish the notes, set a minimum time between them.
    // the note's duration + 30% seems to work well:
    int pauseBetweenNotes = noteDuration * 1.30;
    delay(pauseBetweenNotes);
    // stop the tone playing:
    noTone(8);
  }
}

void loop() {
  // no need to repeat the melody.
}
```

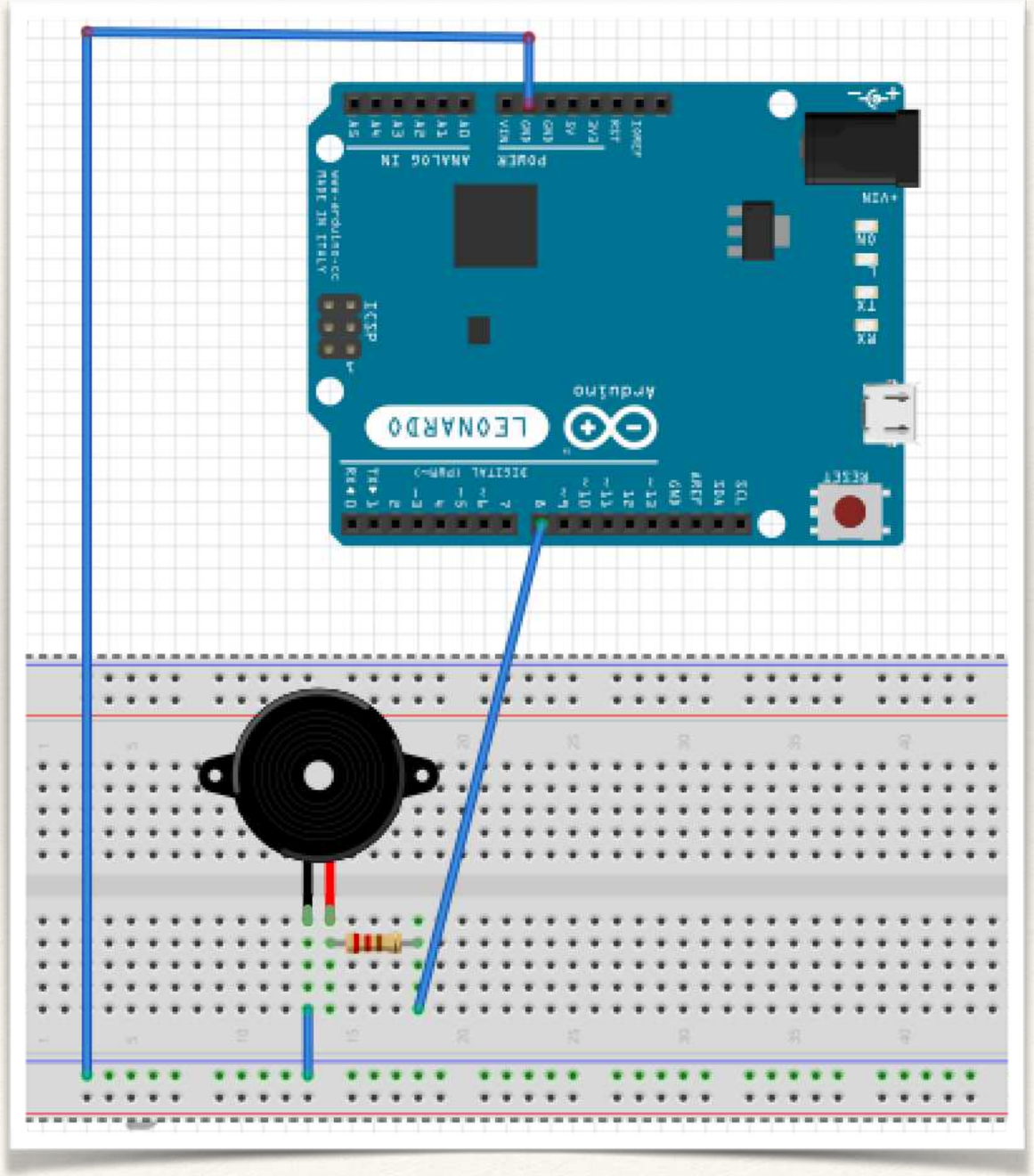

Servo Motor

```
#include <Servo.h>

Servo myservo;  // create servo object to control a servo
                // a maximum of eight servo objects can be
                // created

int pos = 0;    // variable to store the servo position

void setup()
{
  myservo.attach(9); // attaches the servo on pin 9 to the servo
}


void loop()
{
  for(pos = 0; pos < 180; pos += 1)  // goes from 0 to 180
  {                                  // in steps of 1 degree
    myservo.write(pos);              //go to position 'pos'
    delay(15);                       // waits 15ms
  }
  for(pos = 180; pos>=1; pos-=1)     // goes from 180 to 0
  {
    myservo.write(pos);              // go to position 'pos'
    delay(15);                       // waits 15ms
  }
}
```

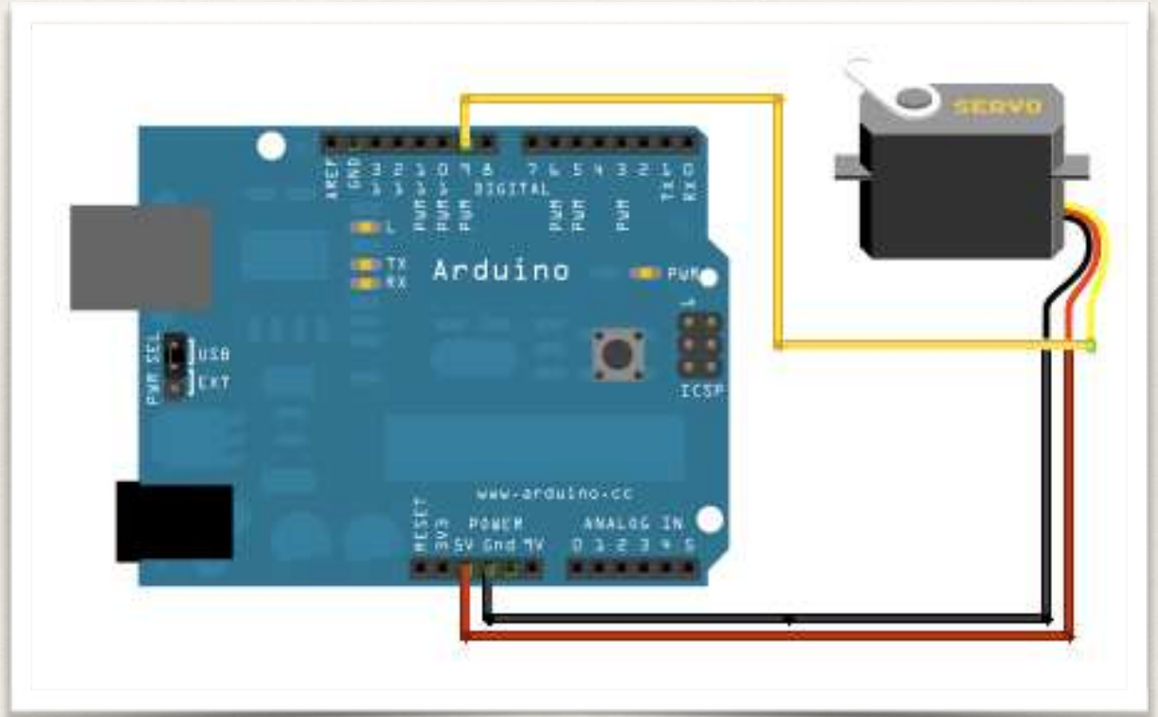

Interface with Processing

Download

Library for Processing v2.0: processing2-arduino.zip (Updated 6 Nov. 2013)
(properties file here: processing2-arduino.txt)

Library for Processing v1.5: processing-arduino.zip (Updated 11 Nov. 2011)
(properties file here: processing-arduino.txt)

Instructions

1. Unzip the library and copy the "arduino" folder into the "libraries" sub-folder of your Processing Sketchbook. (You can find the location of your Sketchbook by opening the Processing Preferences. If you haven't made a "libraries" sub-folder, create one.)
2. Run Arduino, open the Examples > Firmata > StandardFirmata sketch (or servoFirmata), and upload it to the Arduino board.
3. Configure Processing for serial: http://processing.org/reference/libraries/serial/
4. In Processing, open one of the examples that comes with with the Arduino library.
5. Edit the example code to select the serial port used by Arduino. Specifically, change the `[0]` in this line `arduino = new Arduino(this, Arduino.list()[0], 57600);`
6. To find the correct item in the array, run this code in Processing: `import processing.serial.*;`
7. `import cc.arduino.*;`
8. `println(Arduino.list());`

   The output window will enumerate your serial ports. Select the number corresponding to the serial port in your Arduino environment found under Tools > Serial Port.
9. Run the servo example.

Some Circuits (not Arduino) to illustrate Logic Gates

NOT Logic Gate

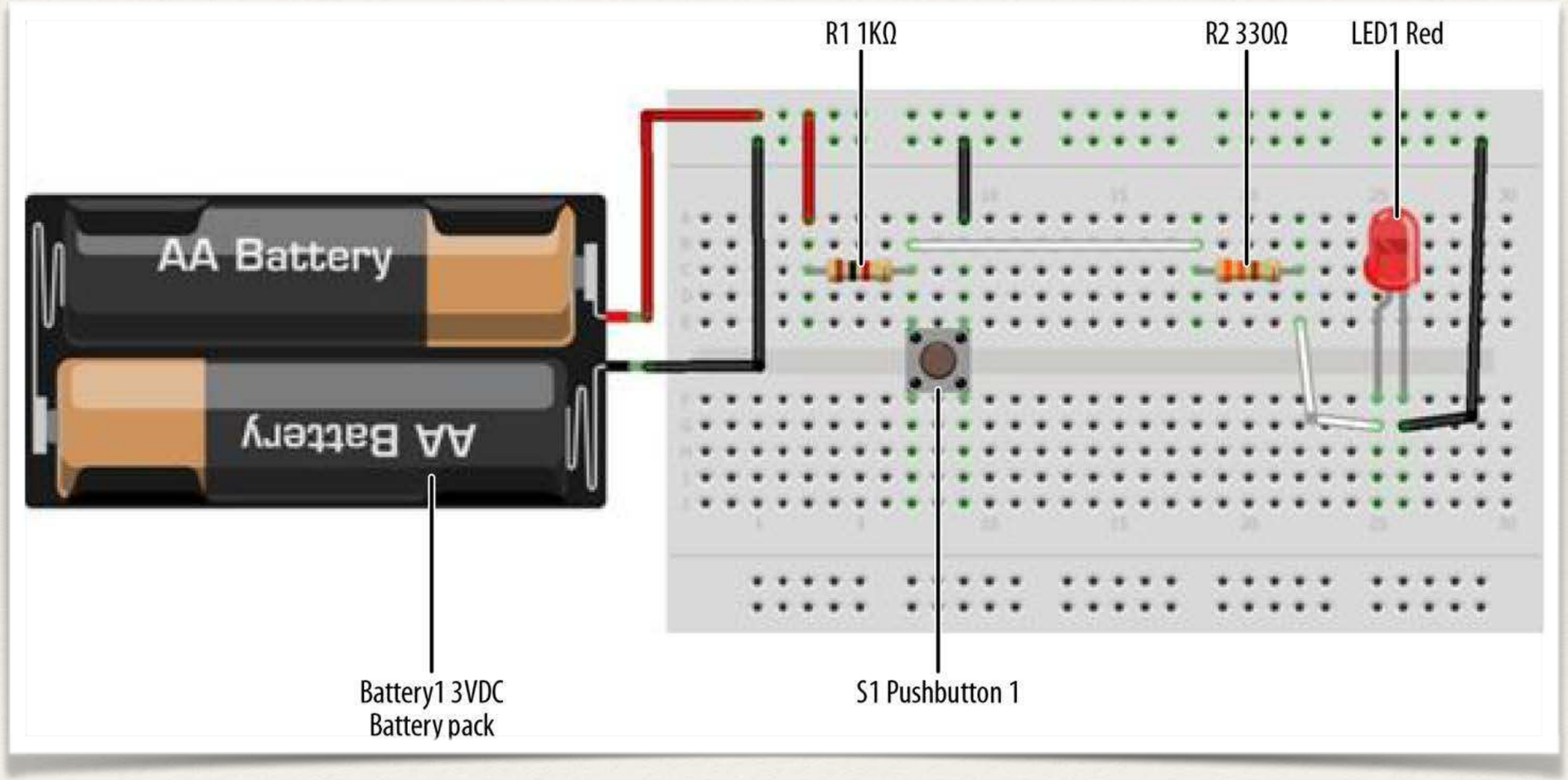

AND Logic Gate

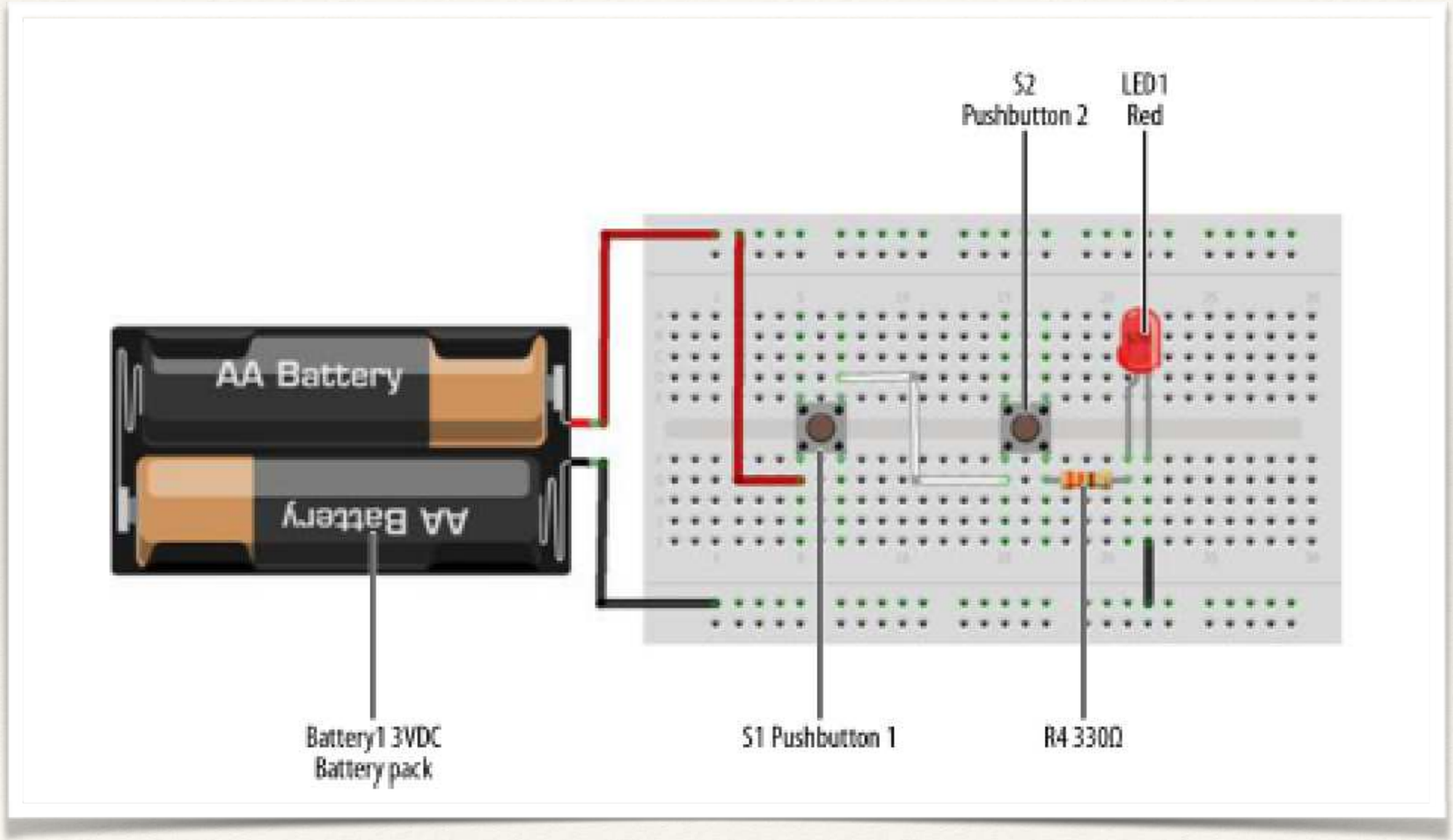

OR Logic Gate

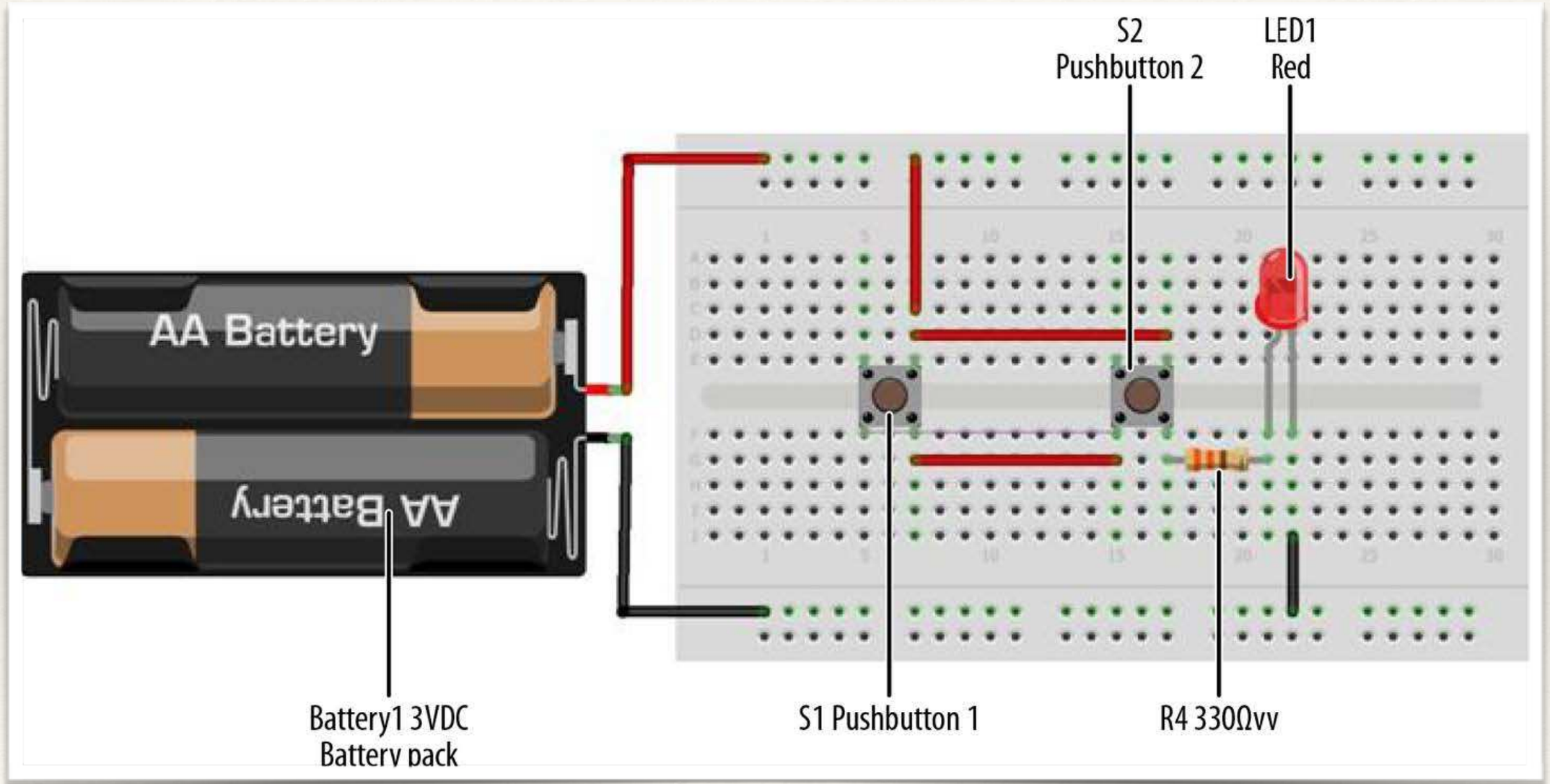

Logic Tester with Arduino

```
/*
Logic Tester with RGB LED
Turns on the green LED when a logic "1" (+5V) signal is detected. The
red LED will turn on at logic "0" (0V) signal. Also, when powering
up the Arduino the red LED is on.
*/
// RG pins wired to the Arduino microcontroller
// give them names:
int redled = 9;
int grnled = 10;
int probein = 8;
int probeStatus = 0;
// the setup routine runs once when you press reset:
void setup() {
// initialize the digital pins as outputs:
pinMode(redled, OUTPUT);
pinMode(grnled, OUTPUT);
pinMode(probein, INPUT);
// turn RGB outputs off:
digitalWrite(redled, HIGH);
digitalWrite(grnled, HIGH);
}
// the loop routine runs over and over again forever:
void loop() {
// read the status of the test probe value:
probeStatus = digitalRead(probein);
if (probeStatus == HIGH) { // check if the test probe value is HIGH
digitalWrite(redled, HIGH); // turn the red LED off (HIGH is off)
digitalWrite(grnled, LOW); // turn the green LED on (LOW is on)
}
else {
digitalWrite(redled, LOW); // turn the red LED on
digitalWrite(grnled, HIGH); // turn the green LED off
}
```