CS 480
Fall 2015

Mike Lam, Professor

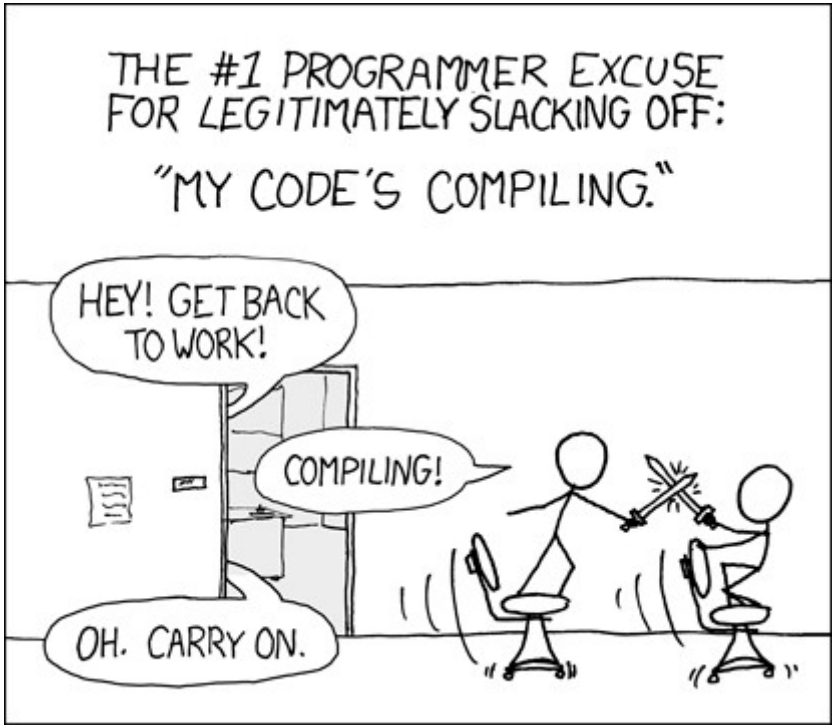

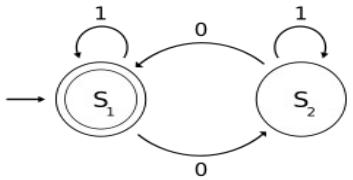

Compilers

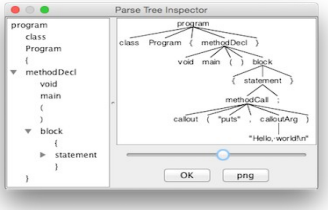

Theory and Implementation

Just-for-fun survey: `http://strawpoll.me/5312347`

Discussion question

- What is a compiler?

Automated translation

- A compiler is a computer program that **automatically translates** other programs from one language to another

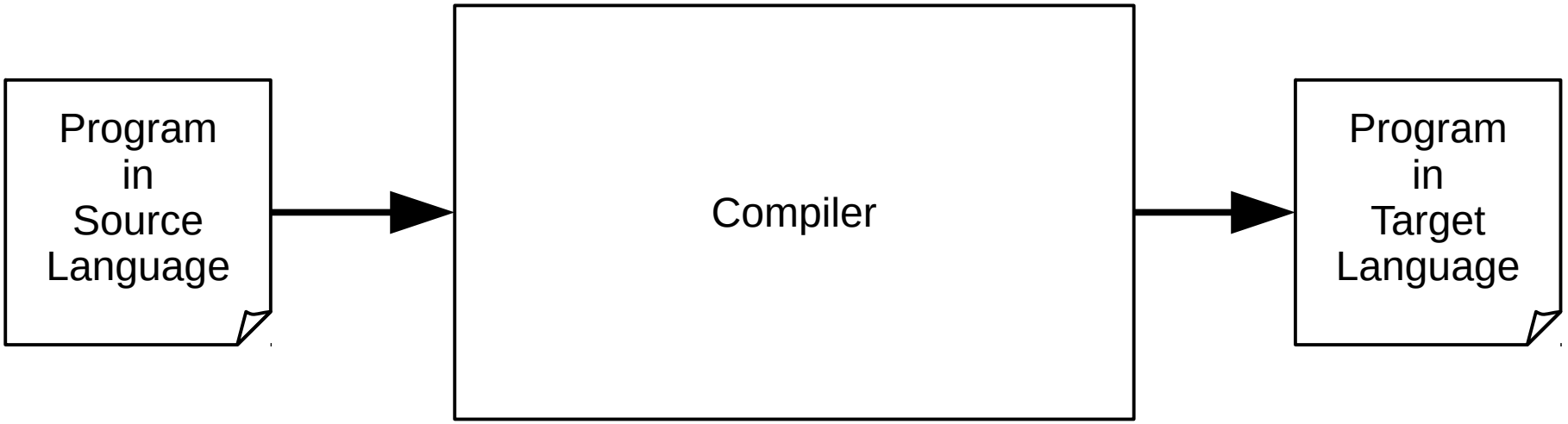

Automated translation

- Compilation vs. interpretation:

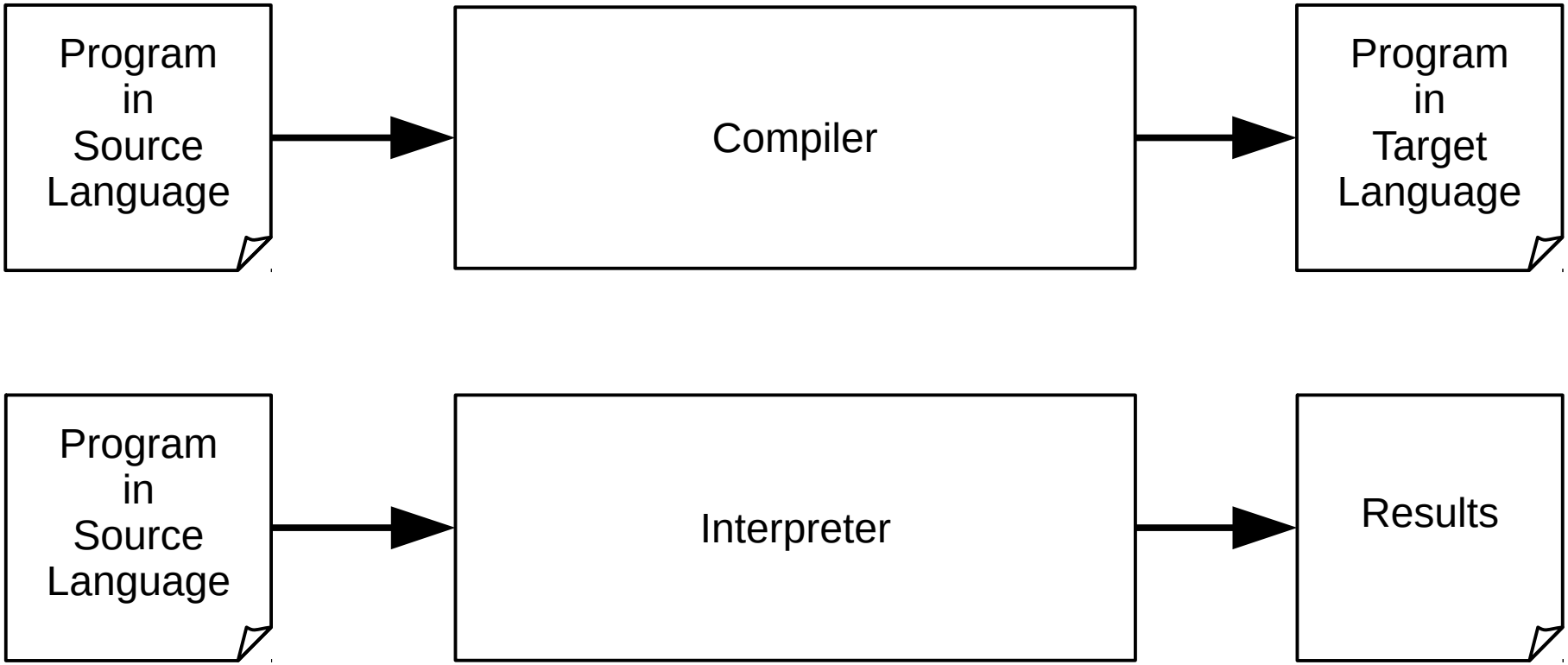

Discussion question

- Why should we study compilers?

CS areas used in compilers

- Data structures
  - CS 240
- Architectures and operating systems
  - CS 261, CS 450
- Automata and language theory
  - CS 327, CS 430
- Graph algorithms
  - CS 327
- Software and systems engineering
  - CS 345, CS 361
- Greedy, heuristic, and fixed-point algorithms
  - CS 452

Reasons to study compilers

- Shows how many areas of CS can be combined to solve a truly "hard" problem (automated translation)
- Bridges theory vs. implementation gap
  - Theory informs implementation
  - Applicable in many other domains
- Practical experience with large software systems
  - My master copy is currently ~5K LOC!
- Exposure to open problems in CS
  - Many optimization issues are subject to ongoing research

Course goal

- Fundamental question
  - "How do compilers translate from a human-readable language to a machine-executable language?"

- After this course, your response should be:
  - "It's really cool! Let me tell you..."

Course design theory

- Big ideas
  - E.g., "A compiler is a large software system consisting of a sequence of phases"
- "Enduring understandings" (stuff you should remember in five years)
  - E.g, "Large problems (such as automated translation) can sometimes be solved by composing existing solutions to smaller problems."
- Learning objectives
  - E.g., "Identify and discuss the technical and social challenges of building a large software system such as a compiler."
- Activities and assignments flow from learning objectives
  - E.g., "Draw a diagram illustrating the major phases of a modern compiler."
- Exams reflect activities and assignments

Course format

- Website: `https://w3.cs.jmu.edu/lam2mo/cs480_2015_08/`
- Weekly schedule
  - Monday: intro lecture
  - Tuesday: initial reading & quiz
  - Wednesday: mini-lecture and discussion
  - Thursday: detailed reading
  - Friday: application activity
- Formative vs. summative assessment
- Goal: engaged learning

Course textbook

- Engineering a Compiler, 2nd Edition
  - Keith Cooper and Linda Torczon
  - Really good book!

- Decaf reference
  - PDF on website

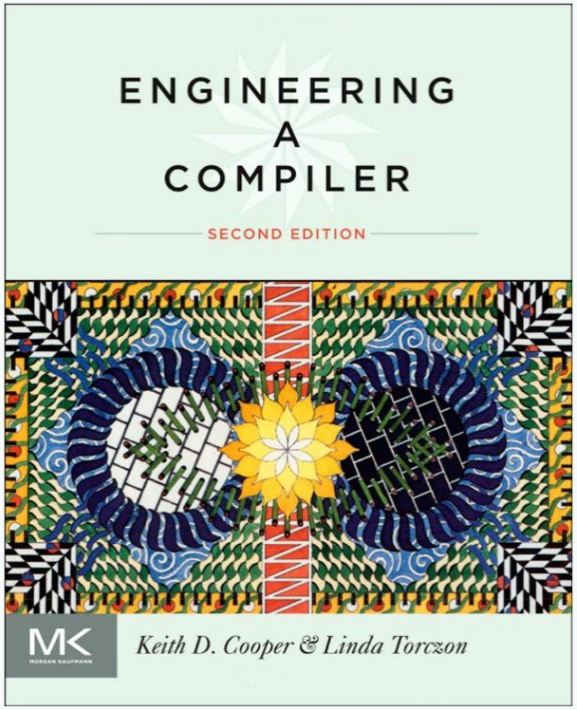

Semester-long project

- Compiler for "Decaf" language
  - Implementation in Java
  - Maven build system w/ fully-integrated test suite
  - Six projects comprised of "pieces" of the full system
- Submission: code + reflection + review
  - Code can be written in teams of two
    - Benefits vs. costs of working in a team
  - Reflection paper must be individual
  - Graded code reviews after project submission

Compiler rule #1

- "The compiler must preserve the *meaning* of the program being compiled."
  - What is a program's *meaning*?

Intermediate representation

- Compilers encode a program's meaning using an intermediate representation (IR)
  - Tree- or graph-based: abstract syntax tree (AST), control flow graph (CFG)
  - Linear: register transfer language (RTL), intermediate language for an optimizing compiler (ILOC)

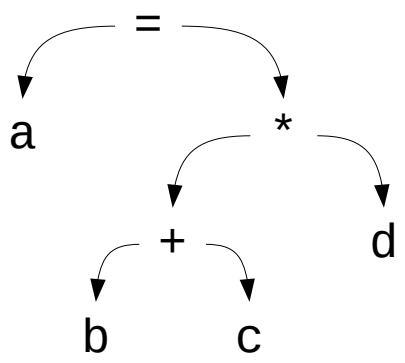


```
load b → r1
load c → r2
add  r1, r2 → r3
load d → r4
mult r3, r4 → r5
store r5 → a
```

Standard compiler framework

- Front end: understand the program (src → IR)
- Back end: encode in target language (IR → targ)
- Primary benefit: easier *retargetting* to different languages or architectures

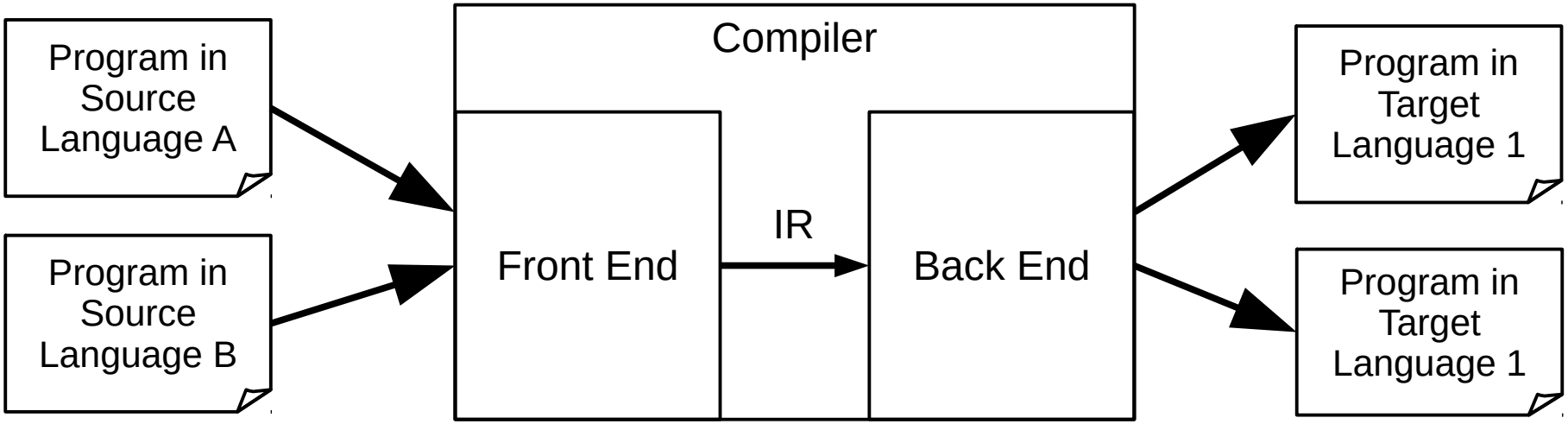

Modern compiler framework

- Multiple front-end passes
  - Lexing/scanning and parsing
  - Tree analysis processing
- Multiple middle-end passes
  - Local optimizations
  - Global optimizations
- Multiple back-end passes
  - Instruction selection and scheduling
  - Register allocation
  - Linking

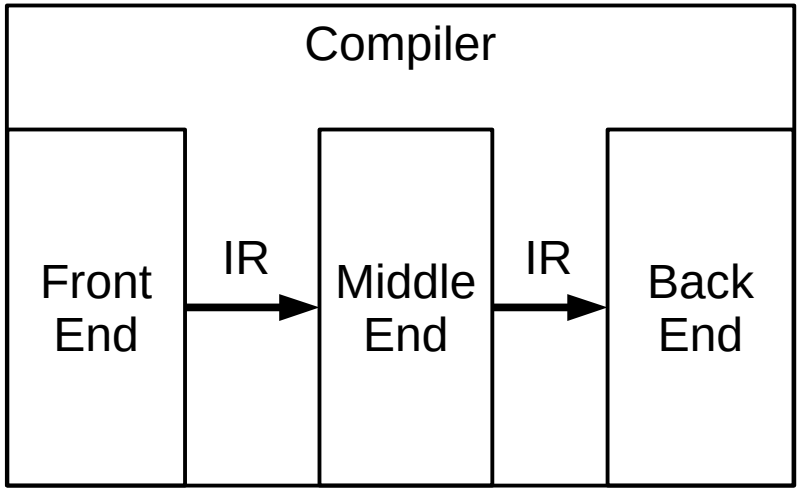

Compiler rule #2

- The compiler should *help* the programmer in some way
  - What does *help* mean?

Discussion question

- As a programmer, what would be the most important design goals for a compiler?

Compiler design goals

- Translate to target language/architecture
- Optimize for fast execution
- Minimize memory use
- Catch software defects early
- Provide helpful error messages
- Run quickly
- Be easily extendable

Differing design goals

- What differences might you expect in compilers designed for the following applications?
  - A just-in-time compiler for running server-side user scripts
  - A compiler used in an introductory programming course
  - A compiler used to build scientific computing codes to run on a massively-parallel supercomputer
  - A compiler that targets a number of diverse systems
  - A compiler that targets an embedded sensor network platform

Decaf language

- Simple imperative language similar to C or Java
- Example:

```
// add.decaf - simple addition example

def int add(int x, int y)
{
    return x + y;
}

def int main()
{
    int a;
    a = 3;
    return add(a, 2);
}
```

```
$ java -jar decaf-1.0.jar -i add.decaf
5
```

Before Wednesday

- Readings
  - "Engineering a Compiler" (EAC) Ch. 1 (23 pages)
  - Decaf reference ("Resources" page on website)
- Tasks
  - Complete first reading quiz on Canvas
  - Complete source intro survey on Canvas
  - Install Java and Maven on your system
  - Download the reference compiler from Canvas ("Files")

Upcoming events

- CS career fair
  - **Monday, Sept. 21, 10am-3pm, nTelos room**
  - 8-10 companies looking for CS majors
  - Internships and full-time positions
- CS senior night
  - **Tuesday, Sept. 8, 5:00-6:30pm**
  - Graduation info, job fairs, photos, etc.
  - Pizza provided!
  - Senior students only

See you Wednesday

- Have a great semester!