CS 470
Spring 2022

Mike Lam, Professor

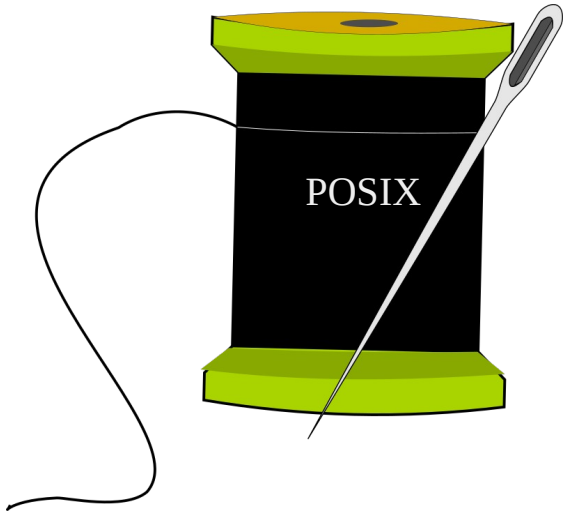

Multithreading & Pthreads

MIMD system architectures

- Shared memory

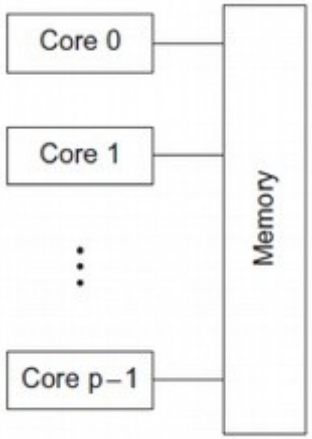

- Distributed memory

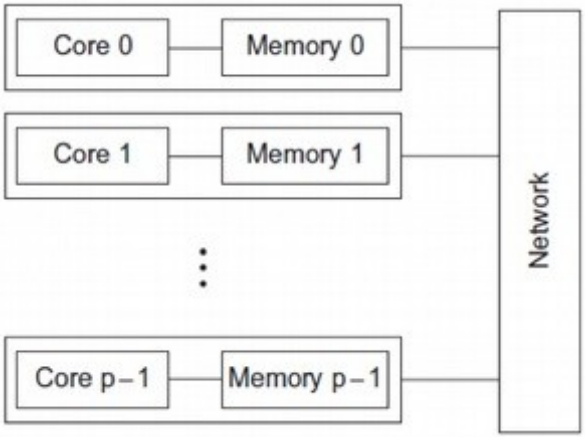

Multithreading

- A process is an instance of a running program
  - Private address space, shared files/sockets
- A thread is a single unit of execution in a process
  - Private stack/registers, shared address space
- Multithreading libraries provide thread management
  - Spawn/kill capabilities
  - Synchronization mechanisms
  - POSIX threads: Pthreads

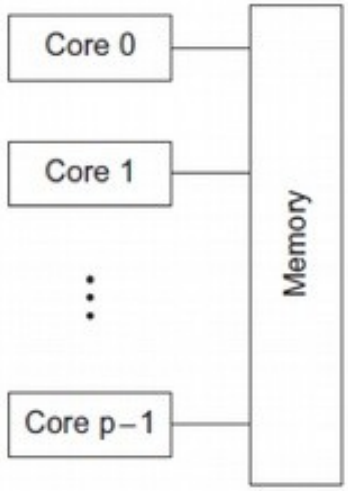

POSIX threads

- Pthreads – POSIX standard interface for threads in C
  - Must `#include <pthread.h>` and link using `-lpthread`
  - `pthread_create`: spawn a new thread
    - **`pthread_t` opaque struct for storing thread info**
    - attributes (or NULL)
    - **thread work routine (function pointer)**
    - thread routine parameter (void*)
  - `pthread_self`: get current thread ID
  - `pthread_exit`: terminate current thread
    - can also terminate implicitly by returning from the thread routine
  - `pthread_join`: wait for another thread to terminate

Thread creation example

```
#include <stdio.h>
#include <pthread.h>

void* work (void* arg)
{
    printf("Hello from new thread!\n");
    return NULL;
}

int main ()
{
    printf("Spawning new thread ...\n");

    pthread_t peer;
    pthread_create(&peer, NULL, work, NULL);
    pthread_join(peer, NULL);

    printf("Done!\n");

    return 0;
}
```

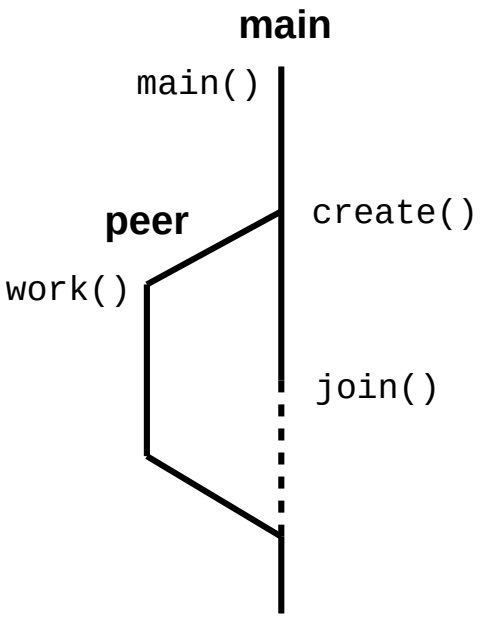

Shared memory

- Some data is shared in threaded programs
  - Global variables (shared, single static copy)
  - Local variables (multiple copies, one on each stack)
    - Technically still shared if in memory, but harder to access
    - Not shared if cached in register
    - Safer to assume they're private
  - Local static variables (shared, single static copy)

Issues with shared memory

- Nondeterminism
- Data races and deadlock

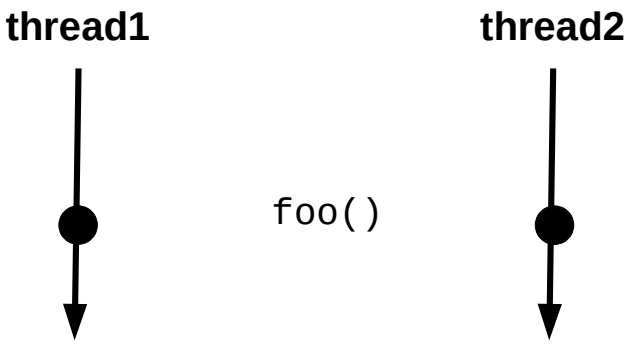


```
int x = 0;

void foo()
{
    x += 7;
}
```

Issues with shared memory

- Nondeterminism
- Data races and deadlock

```
foo:
    irmovq x, %rcx
    irmovq 7, %rax
    mrmovq (%rcx), %rdx
    addq %rax, %rdx
    rmmovq %rdx, (%rcx)
    ret

x:
    .quad 0
```

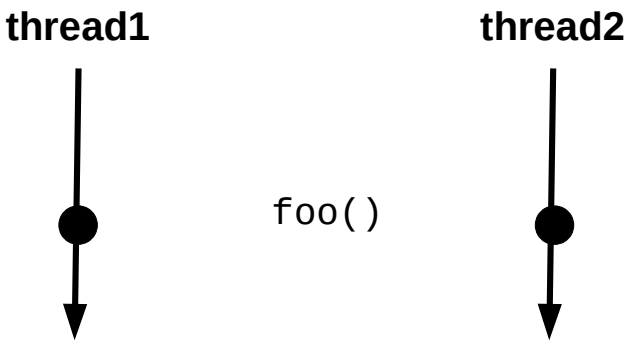

Issues with shared memory

- Nondeterminism
- Data races and deadlock

```
foo:
    irmovq x, %rcx
    irmovq 7, %rax
    mrmovq (%rcx), %rdx
    addq %rax, %rdx
    rmmovq %rdx, (%rcx)
    ret

x:
    .quad 0
```

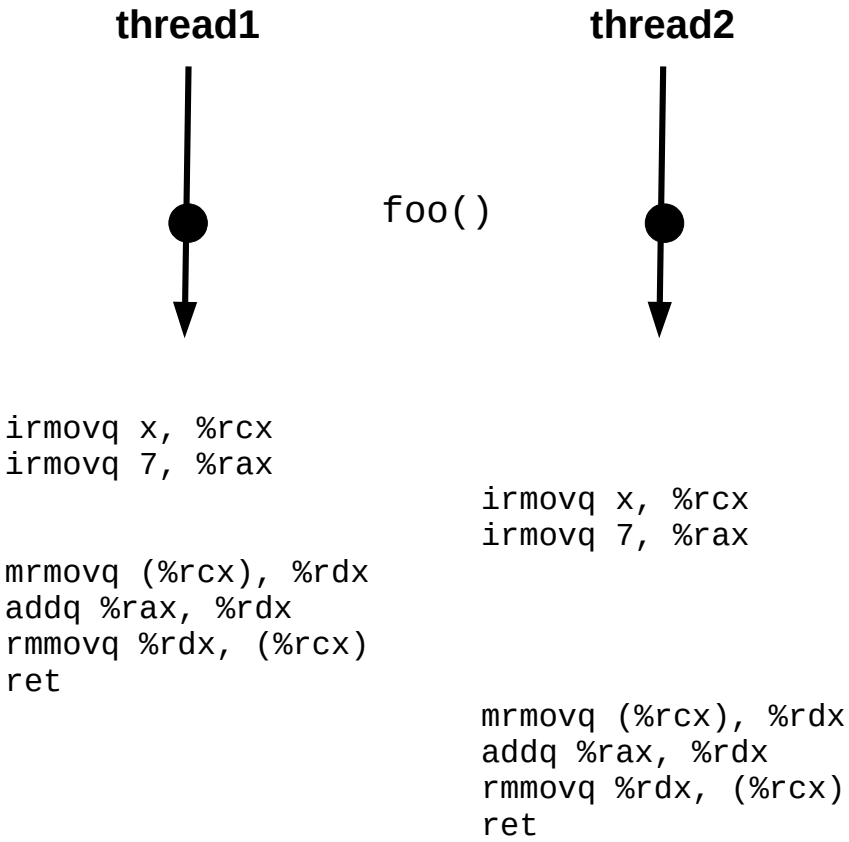

This interleaving is ok.

Issues with shared memory

- Nondeterminism
- Data races and deadlock

```
foo:
    irmovq x, %rcx
    irmovq 7, %rax
    mrmovq (%rcx), %rdx
    addq %rax, %rdx
    rmmovq %rdx, (%rcx)
    ret

x:
    .quad 0
```

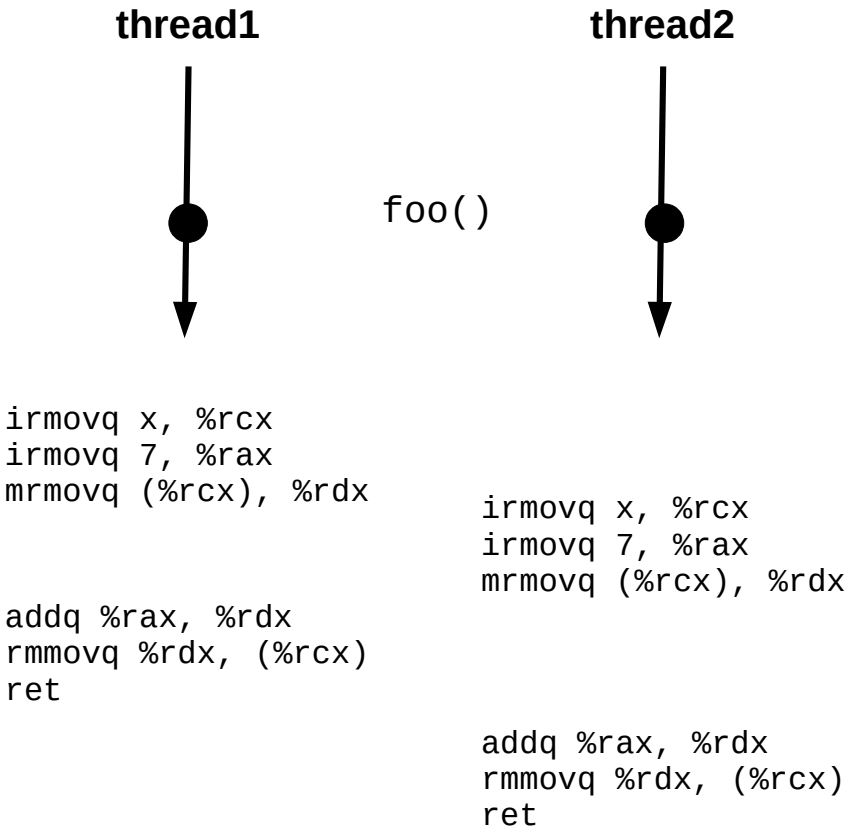

PROBLEM!

Issues with shared memory

- Nondeterminism
  - **Incorrect code can produce “correct” results**
  - Test suites cannot guarantee correctness!
- Data races
- Deadlock
- Starvation

Synchronization mechanisms

- Busy-waiting (wasteful!)
- Atomic instructions (e.g., `LOCK` prefix in x86)
- Pthreads
  - Mutex: simple mutual exclusion ("lock")
  - Condition variable: lock + wait set (wait/signal/broadcast)
  - Semaphore: access to limited resources
    - Not technically part of Pthreads library (just the POSIX standard)
  - Barrier: ensure all threads are at the same point
    - Not present in all implementations (requires `--std=gnu99` on cluster)
- Java threads
  - Synchronized keyword: implicit mutex
  - Monitor: lock associated w/ an object (wait/notify/notifyAll)

Mutexes

- `pthread_mutex_`**`init`** `(pthread_mutex_t*, attrs)`
  - Initialize a mutex
  - `PTHREAD_MUTEX_INITIALIZER` macro for defaults
- `pthread_mutex_`**`lock`** `(pthread_mutex_t*)`
  - Acquire mutex (block if unavailable)
- `pthread_mutex_`**`unlock`** `(pthread_mutex_t*)`
  - Release mutex
- `pthread_mutex_`**`destroy`** `(pthread_mutex_t*)`
  - Clean up a mutex

Barrier w/ mutex

Setup:

```
int counter = 0;                        // number of threads waiting
int thread_count;                       // number of total threads
pthread_mutex_t barrier_mutex;
```

Threads:

```
pthread_mutex_lock(&barrier_mutex);
counter++;
pthread_mutex_unlock(&barrier_mutex);
while (counter < thread_count);         // busy wait
```

Issue: wasted CPU cycles!

Semaphores

- `sem_init (sem_t*, pshared, int value)`
  - Initialize a semaphore to *value*
- `sem_wait (sem_t*)`
  - If *value* > 0, decrement *value* and return
  - Else, block until signaled
- `sem_post (sem_t*)`
  - Increment *value* and signal a blocked thread
  - Use a loop to signal multiple blocked threads
- `sem_getvalue (sem_t*, int*)`
  - Return current *value*
- `sem_destroy (sem_t*)`
  - Clean up a semaphore

Barrier w/ semaphores

Setup:

```
sem_t count_sem;      // initialize to 1 (access to waiting_threads)
sem_t barrier_sem;    // initialize to 0
volatile int waiting_threads = 0;
```

Threads:

```
sem_wait(&count_sem);
waiting_threads++;
if (waiting_threads < thread_count) {
    sem_post(&count_sem);
    sem_wait(&barrier_sem);
} else {  // last thread to the barrier
    waiting_threads--;
    sem_post(&count_sem);
    while (waiting_threads--> 0) {
        sem_post(&barrier_sem);
    }
}
```

Issue: barrier_sem can't be re-used later (race condition if one thread hits the second barrier while another thread is still waiting on the first)

Condition variables

- `pthread_cond_init (pthread_cond_t*, attrs)`
  - Initialize a condition variable
- `pthread_cond_wait (pthread_cond_t*, pthread_mutex_t*)`
  - Release mutex and block until signaled
  - Re-acquires mutex after waking up
  - A variant also exists that times out after a certain period
- `pthread_cond_signal (pthread_cond_t*)`
  - Wake a single blocked thread (should be holding the mutex)
- `pthread_cond_broadcast (pthread_cond_t*)`
  - Wake all blocked threads (should be holding the mutex)
- `pthread_cond_destroy (pthread_cond_t*)`
  - Clean up a condition variable

Barrier w/ condition variable

Setup:

```
mutex_t count_mut;
cond_t done_waiting;
volatile int waiting_threads = 0;
```

Threads:

```
mutex_lock(&count_mut);
waiting_threads++;
if (waiting_threads < thread_count) {
    cond_wait(&done_waiting, &count_mut);
} else {  // last thread to the barrier
    waiting_threads = 0;
    cond_broadcast(&done_waiting);
}
mutex_unlock(&count_mut);
```

Barrier comparison

Semaphores

Setup:

```
sem_t count_sem;      // initialize to 1
sem_t barrier_sem;    // initialize to 0
volatile int waiting_threads = 0;
```

Threads:

```
sem_wait(&count_sem);
waiting_threads++;
if (waiting_threads < thread_count) {
    sem_post(&count_sem);
    sem_wait(&barrier_sem);
} else {  // last thread to the barrier
    waiting_threads--;
    sem_post(&count_sem);
    while (waiting_threads--> 0) {
        sem_post(&barrier_sem);
    }
}
```

Condition

Setup:

```
mutex_t count_mut;
cond_t done_waiting;
volatile int waiting_threads = 0;
```

Threads:

```
mutex_lock(&count_mut);
waiting_threads++;
if (waiting_threads < thread_count) {
    cond_wait(&done_waiting, &count_mut);
} else {  // last thread to the barrier
    waiting_threads = 0;
    cond_broadcast(&done_waiting);
}
mutex_unlock(&count_mut);
```

Barrier

Setup:

```
barrier_t barrier;    // initialize to nthreads
```

Threads:

```
barrier_wait(&barrier);
```

Condition variables

- Issue: POSIX standard says that `pthread_cond_wait` might experience spurious wakeups from sources other than signal/broadcast calls
  - Goal: optimize runtime and force programmers to write correct code

```
while (pthread_cond_wait(&cond, &mut) != 0);
```

- Issue: non-determinism!
  - Every condition should have an associated boolean predicate
  - The predicate should be true before condition is signaled

    e.g., "`task_queue_size > 0`"
  - Waiting thread should **re-check predicate** after waking up
    - Another thread may have invalidated it in the meantime!
  - Best practice: use a predicate loop

```
pthread_mutex_lock(&mut);
while (!predicate) {
    pthread_cond_wait(&cond, &mut);
}
pthread_mutex_unlock(&mut);
```

Condition variables

Setup (static):

```
pthread_mutex_t mutex = PTHREAD_MUTEX_INITIALIZER;
pthread_cond_t cond = PTHREAD_COND_INITIALIZER;
volatile boolean status = false;    // protected by mutex
```

Thread 1:

```
pthread_mutex_lock(&mutex);
while (!status) {
    pthread_cond_wait(&cond, &mutex);
}
// at this point, status == true and mutex is locked
```

Thread 2:

```
// do something that triggers status
pthread_mutex_lock(&mutex);
status = true;
pthread_cond_signal(&cond);    // or pthread_cond_broadcast
pthread_mutex_unlock(&mutex);
```

Condition variables

Setup (static):

```
pthread_mutex_t mutex = PTHREAD_MUTEX_INITIALIZER;
pthread_cond_t cond = PTHREAD_COND_INITIALIZER;
volatile boolean status = false;    // protected by mutex
```

initializer macros; can be used if you don't need attributes

C keyword meaning "don't optimize this variable; it could change at any time"

Thread 1:

```
pthread_mutex_lock(&mutex);
while (!status) {
    pthread_cond_wait(&cond, &mutex);
}
// at this point, status == true and mutex is locked
```

check predicate again!

always acquire lock before wait, signal, or broadcast

Thread 2:

```
// do something that triggers status
pthread_mutex_lock(&mutex);
status = true;
pthread_cond_signal(&cond);    // or pthread_cond_broadcast
pthread_mutex_unlock(&mutex);
```

set predicate

Error checking

- All Pthreads calls might return a non-zero value
  - This generally indicates an error (except for cond_wait)
  - Recovering from errors is not our primary concern now
    - Although we'll talk a bit about fault tolerance later this semester
  - For now, just write a wrapper to abort on error
  - Example:

```
void lock(pthread_mutex_t *mut)
{
    if (pthread_mutex_lock(mut) != 0) {
        printf("ERROR: could not acquire mutex\n");
        exit(EXIT_FAILURE);
    }
}
```

Common synchronization patterns

- Naturally (“embarrassingly”) parallel
  - No synchronization!
- Mutual exclusion
  - Use a lock to prevent simultaneous access
- Producer/consumer
  - Protect common buffer w/ lock
- Readers/writers
  - Multiple lock types
- Supervisor/worker
  - One producer, many consumers
- Dining philosophers
  - Atomic acquisition of multiple locks

Supervisor/worker model

- Common pattern: supervisor/worker threads
  - Original “supervisor” thread creates multiple “worker” threads
  - Each worker thread does a chunk of the work
    - Coordinate via shared global data structure w/ locking
  - Main/supervisor thread waits for workers, then aggregates results

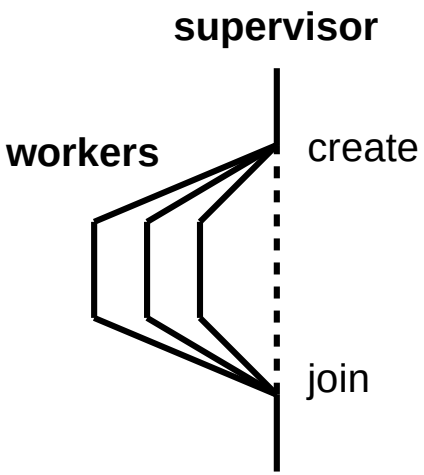

Thread pool model (P1)

- Minor tweak on supervisor/worker: thread pool model
  - Supervisor thread creates multiple worker threads
  - Work queue tracks chunks of work to be done
    - Producer/consumer: supervisor enqueues, workers dequeue
    - Synchronization required
    - Workers idle while queue is empty

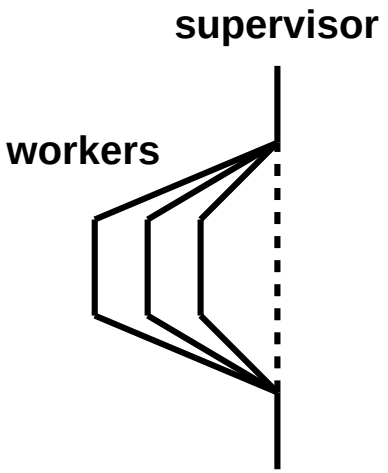

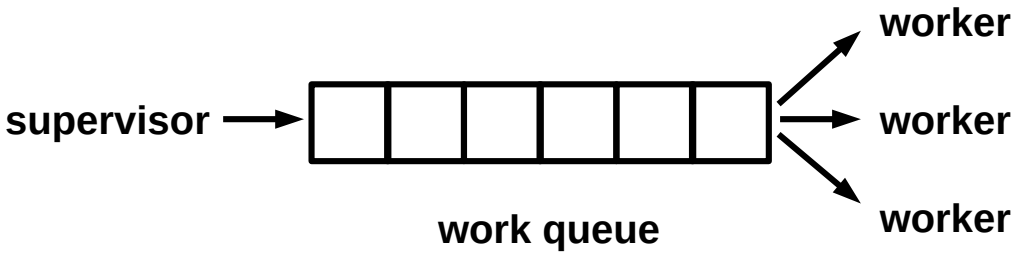

P1 pseudocode

```
supervisor:

    done = false
    initialize work queue and sync variables
    spawn worker threads

    for each (action, num) pair in input:
        if action == 'p':
            add num to work queue
            wake an idle worker thread
        else if action == 'w':
            wait num seconds

    done = true
    wake any idle workers
    wait for all workers to finish

    print results, clean up, and exit
```

```
worker:

    while not done or queue is not empty:
        if queue is not empty:
            extract num from work queue
            update(num)
        else:
            become idle until awakened
```

NOT COMPLETE, AND NOT THE ONLY SOLUTION!

Tools

- Helgrind: Valgrind-based thread error detector
  - Available on the cluster! (use it for P1!)
  - Usage: `valgrind --tool=helgrind <YOUR PROGRAM>`
  - Detects data races, deadlock, and other Pthread misuses
  - Helgrind documentation
- Other tools:
  - Intel Inspector
  - Arm DDT
  - Google ASan

Synchronization granularity

- Granularity: level at which a structure is locked
  - Whole structure vs. individual pieces
  - If individual pieces, which pieces?
  - Simple locks vs. read/write locks
  - Tradeoff: coarse vs. fine-grained locks

Table 4.3 Linked List Times: 1000 Initial Keys, 100,000 ops, 99.9% `Member`, 0.05% `Insert`, 0.05% `Delete`

	Number of Threads			
Implementation	**1**	**2**	**4**	**8**
Read-Write Locks	0.213	0.123	0.098	0.115
One Mutex for Entire List	0.211	0.450	0.385	0.457
One Mutex per Node	1.680	5.700	3.450	2.700

Table 4.4 Linked List Times: 1000 Initial Keys, 100,000 ops, 80% `Member`, 10% `Insert`, 10% `Delete`

	Number of Threads			
Implementation	**1**	**2**	**4**	**8**
Read-Write Locks	2.48	4.97	4.69	4.71
One Mutex for Entire List	2.50	5.13	5.04	5.11
One Mutex per Node	12.00	29.60	17.00	12.00

Locality

- Temporal locality: frequently-accessed items will continue to be accessed in the future
  - Theme: **repetition is common**
- Spatial locality: nearby addresses are more likely to be accessed soon
  - Theme: **sequential access is common**
- Why do we care?
  - *Shared-memory programs with good locality run faster than programs with poor locality*

Caching effects

- Caching
  - Keep frequently-used stuff in faster memory
- Cache line
  - Single unit of cached data
- Cache hits/misses
  - Was data in cache? (if so, hit; if not, miss)
- Cache invalidation
  - Writes to one cache can render another cache out-of-date
- False sharing
  - Unnecessary cache invalidation

Multithreading summary

- Shared memory parallelism has a lot of benefits
  - Low overhead for thread creation/switching
  - Uniform memory access times (symmetric multiprocessing)
- It also has significant issues
  - Limited scaling (# of cores)
  - Requires explicit thread management
  - Requires explicit synchronization (**HARD**!)
  - Caching problems can be difficult to diagnose
- Core design tradeoff: synchronization granularity
  - Higher granularity: simpler but slower
  - Lower granularity: more complex but faster