CS 432
Fall 2020

Mike Lam, Professor

Γ λ τ

```
public class WhileLoopCounter extends
    private int numWhileLoops = 0;
    @Override
    public void preVisit(ASTWhileLoop
    {
        numWhileLoops++;
    }
    @Override
    public void postVisit(ASTProgram
    {
        System.out.println("Number of
                numWhileLoops);
    }
}
```

Type Systems and the Visitor Design Pattern

General theme

- *Pattern matching* over a tree is very useful in compilers
  - Debug output (P2)
  - **Type checking & other static analysis (P3)**
  - Code generation (P4)
  - Instruction selection
- Theory and practice
  - Type systems describe correctly-typed program trees
  - Visitor design pattern allows clean implementation in a non-functional language
    - Generalization of tree traversal (CS 240 approach)

Types

- A type is an abstract category characterizing a range of data values
  - Base types: integer, character, boolean, floating-point
  - Enumerated types (finite list of constants)
  - Pointer types (“address of X”)
  - Array or list types (“list of X”)
  - Compound/record types (named collections of other types)
  - Function types: (type1, type2, type3) → type4

Not all of these will be necessary for Decaf

Type Systems

- A type system is a set of type rules
  - Rules: valid types, type compatibility, and how values can be used
  - A type judgment is an assertion that expression **x** has type t
    - Often requires the context of a type environment (i.e., symbol table)
  - "Strongly typed" if every expression can be assigned an unambiguous type
  - "Statically typed" if all types can be assigned at compile time
  - "Dynamically typed" if some types can only be discovered at runtime

- Benefits of a robust type system
  - Earlier error detection
  - Better documentation
  - Increased modularization

Formal Type Theory

- A formal type system is a set of type rules
  - Each rule has a name, zero or more premises (above the line), and a conclusion (below the line)
  - Premises and conclusions are type judgments (**A ⊢ x : t**)
  - "⊢" is a ternary operator connecting type environments, expressions, and types
  - Omit type for statements ("**A ⊢ s**" means "s is well-typed in environment A")

$$\text{TDec}\ \frac{}{\vdash \texttt{DEC} : \mathbf{int}} \qquad \text{TTrue}\ \frac{}{\vdash \texttt{true} : \mathbf{bool}} \qquad \text{TLoc}\ \frac{\texttt{ID} : \tau \in \Gamma}{\Gamma \vdash \texttt{ID} : \tau}$$

$$\text{TAdd}\ \frac{\Gamma \vdash e_1 : \mathbf{int} \qquad \Gamma \vdash e_2 : \mathbf{int}}{\Gamma \vdash e_1\ \text{`+'}\ e_2 : \mathbf{int}} \qquad \text{TAssign}\ \frac{\texttt{ID} : \tau \in \Gamma \qquad \Gamma \vdash e : \tau}{\Gamma \vdash \texttt{ID}\ \text{`='}\ e\ \text{`;'}}$$

$$\text{TFuncCall}\ \frac{\texttt{ID} : (\tau_1, \tau_2, ..., \tau_n) \rightarrow \tau_r \in \Gamma \qquad \Gamma \vdash e_1 : \tau_1 \qquad \Gamma \vdash e_2 : \tau_2 \qquad ... \qquad \Gamma \vdash e_n : \tau_n}{\Gamma \vdash \texttt{ID}\ \text{`('}\ e_1, e_2, ..., e_n\ \text{`)'} : \tau_r}$$

Formal Type Theory

- Type proofs consist of composing multiple type rules
  - Apply rule instances recursively to form proof trees
  - Type environments (e.g., symbol tables) provide type context
  - Proof structure is based on the AST structure ("syntax-directed")
  - **Curry-Howard correspondence** ("proofs as programs")

$$\dfrac{\dfrac{\dfrac{\text{foo} : (\text{int}) \rightarrow \text{int} \in A \qquad \dfrac{y : \text{int} \in A}{A \vdash y : \text{int}}\ \text{TVar}}{A \vdash \text{foo}(y) : \text{int}}\ \text{TFuncCall} \qquad \dfrac{}{A \vdash 1 : \text{int}}\ \text{TDec}}{A \vdash \text{foo}(y) + 1 : \text{int}}\ \text{TAdd} \qquad x : \text{int} \in A}{A \vdash x = \text{foo}(y) + 1}\ \text{TAssign}$$

$A = \{ \text{foo} : \text{int} \rightarrow \text{int}, x : \text{int}, y : \text{int} \}$

Formal Type Theory

- Is the following Decaf expression well-typed in the given environment?
  - If so, what is its type?

$$x + 4$$

$$A = \{ x : \text{int} \}$$

AST:

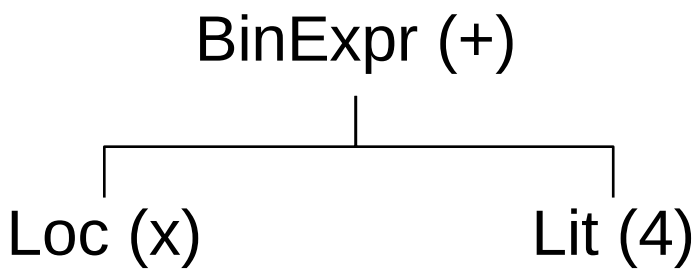

Formal Type Theory

$$\text{TLoc}\ \frac{\texttt{ID} : \tau \in \Gamma}{\Gamma \vdash \texttt{ID} : \tau} \qquad \text{TDec}\ \frac{}{\vdash \texttt{DEC} : \mathbf{int}}$$

$$\text{TAdd}\ \frac{\Gamma \vdash e_1 : \mathbf{int} \qquad \Gamma \vdash e_2 : \mathbf{int}}{\Gamma \vdash e_1\ \text{`+'}\ e_2 : \mathbf{int}}$$

$$\frac{\text{TLoc}\ \dfrac{x : \text{int} \in A}{A \vdash x : \text{int}} \qquad \dfrac{}{A \vdash 4 : \text{int}}\ \text{TDec}}{A \vdash x + 4 : \text{int}}\ \text{TAdd}$$

$A = \{ x : \text{int} \}$

P3: Static Analysis

- Language and project specifications provide rules to check at each type of AST node while traversing the AST
  - E.g., at WhileLoop, make sure the conditional has a boolean type
  - E.g., at BinaryOp, if it's an add make sure both operands are integers (or if it's an equals make sure the operand types match)

$$\text{TDec}\ \frac{}{\vdash \texttt{DEC} : \textbf{int}} \qquad \text{THex}\ \frac{}{\vdash \texttt{HEX} : \textbf{int}} \qquad \text{TStr}\ \frac{}{\vdash \texttt{STR} : \textbf{str}}$$

$$\text{TTrue}\ \frac{}{\vdash \texttt{true} : \textbf{bool}} \qquad \text{TFalse}\ \frac{}{\vdash \texttt{false} : \textbf{bool}} \qquad \text{TSubExpr}\ \frac{\Gamma \vdash e : t}{\Gamma \vdash \text{`(`}\ e\ \text{`)`} : t}$$

$$\text{TAdd}\ \frac{\Gamma \vdash e_1 : \textbf{int} \qquad \Gamma \vdash e_2 : \textbf{int}}{\Gamma \vdash e_1\ \text{`+`}\ e_2 : \textbf{int}}$$

(similar for TSub (`-`), TMul (`*`), TDiv (`/`) and TMod (`%`))

$$\text{TEq}\ \frac{\Gamma \vdash e_1 : t \qquad \Gamma \vdash e_2 : t}{\Gamma \vdash e_1\ \text{`==`}\ e_2 : \textbf{bool}}$$

(similar for TNeq (`!=`))

$$\text{TWhile}\ \frac{\Gamma \vdash e : \textbf{bool} \qquad \Gamma \vdash b}{\Gamma \vdash \texttt{while}\ \text{`(`}\ e\ \text{`)`}\ b}$$

P4: Static Analysis

- General idea: traverse AST and reject invalid programs
  - Need to traverse the tree multiple times
    - Print debug output
    - Build symbol tables
    - Perform type checking
    - Later compiler passes
  - We could write the tree traversal code every time, but that would be tedious w/ a lot of code duplication
    - Software engineering provides a better way in the form of the visitor design pattern

A brief digression ...

- What are "design patterns"?

(remember them from CS 345?)

A brief digression ...

- What are "design patterns"?
  - A reusable "template" or "pattern" that solves a common design problem
    - "Tried and true" solutions
  - Main reference: Design Patterns: Elements of Reusable Object-Oriented Software
    - "Gang of Four:" Erich Gamma, Richard Helm, Ralph Johnson, and John Vlissides

(excerpt scanned as PDF in Canvas)

Common Design Patterns

- **Adapter** – Converts one interface into another
- **Factory** – Allows clients to create objects without specifying a concrete class
- **Flyweight** – Manages large numbers of similar objects efficiently via sharing
- **Iterator** – Provides sequential access to a collection
- **Monitor** – Ensures mutually-exclusive access to member variables
- **Null Object** – Prevents null pointer dereferences by providing "default" object
- **Observer** – Track and update multiple dependents automatically on events
- **Singleton** – Provides global access to a single instance object
- **Strategy** – Encapsulate interchangeable algorithms
- **Thread Pool** – Manages allocation of available resources to queued tasks
- **Visitor** – Provides an iterator over a (usually recursive) structure

Design Patterns

- Pros
  - Faster development
  - More robust code (if implemented properly)
  - More readable code (for those familiar with the patterns)
  - Improved maintainability
- Cons
  - Increased abstraction
  - Increased complexity
  - Philosophical: Suggests language deficiencies
    - Consider a more appropriate language if many patterns are needed

Visitor Pattern

- Visitor design pattern: don't mix data and actions
  - Separates the **representation** of an object structure from the definition of **operations** on that structure
  - Keeps data class definitions cleaner
  - Allows the creation of new operations without modifying all data classes
  - Solves a general issue with most OO languages
    - Lack of multiple dispatch (choosing a concrete method based on two objects' data types)
      - NOTE: This is stronger than single dispatch + overloading alone
    - Less useful in functional languages with more robust pattern matching
    - In C, we'll handle this manually with function pointers

General Form

- Data: Abstract**Element** (`ASTNode`)
  - ConcreteElement1 (`Program`)
  - ConcreteElement2 (`VarDecl`)
  - ConcreteElement3 (`FuncDecl`)
  - (etc.)
  - All elements define "`Accept()`" method that recursively calls "`Accept()`" on any child nodes (this is the actual tree traversal code!)
- Actions: Abstract**Visitor** (`NodeVisitor`)
  - ConcreteVisitor1 (`PrintVisitor`)
  - ConcreteVisitor2 (`SetParentVisitor`)
  - ConcreteVisitor3 (`CalcDepthVisitor`)
  - (etc.)
  - All visitors have "`previsit_X()`" and "`postvisit_X()`" methods for each element type (i.e., AST node type)

Benefits

- Adding new operations is easy
  - Just create a new concrete visitor
  - In our compiler, create a new `NodeVisitor` struct
- No wasted space for state in data classes
  - Just maintain state in the visitors (e.g, `AnalysisData`)
  - In our compiler, we will make a few exceptions for state that is shared across many visitors (e.g., symbol tables)
    - These are stored as “attributes” in the AST

Drawbacks

- Adding new data classes is hard
  - This won't matter for us, because our AST types are dictated by the grammar and won't change
- Breaks encapsulation for data members
  - Visitors often need access to all data members
  - This is ok for us, because our data objects are just structs anyway (all data is public)

Minor Modifications

- "`Accept()`" → "`traverse()`"
- "`Visit()`" → "`previsit_X()`" and "`postvisit_X()`"
  - `previsit_X()` allows preorder operations
  - `postvisit_X()` allows postorder operations
  - Also, a single inorder method: `invisit_binaryop()`
- `NodeVisitor` struct
  - Function pointers for all visitor methods
    - CS 430 note: this is a manual implementation of virtual method tables!
  - No type checking – be careful when building the struct!
  - `NULL` pointers for unneeded methods
  - Allows subclasses to define only the relevant visit methods

Object-oriented implementation

- Dispatch
  - Static dispatch: all method calls can be resolved at compile time
  - Dynamic dispatch: polymorphic method calls resolved at run time
  - Single vs. multiple dispatch (one object's type vs. multiple objects' type)
- Class instance record
  - List of member variables for objects w/ vtable pointer
  - Subclass CIR is a copy of the parents' with (potentially) added fields
- Virtual method table (*vtable*)
  - List of methods w/ pointers to implementations

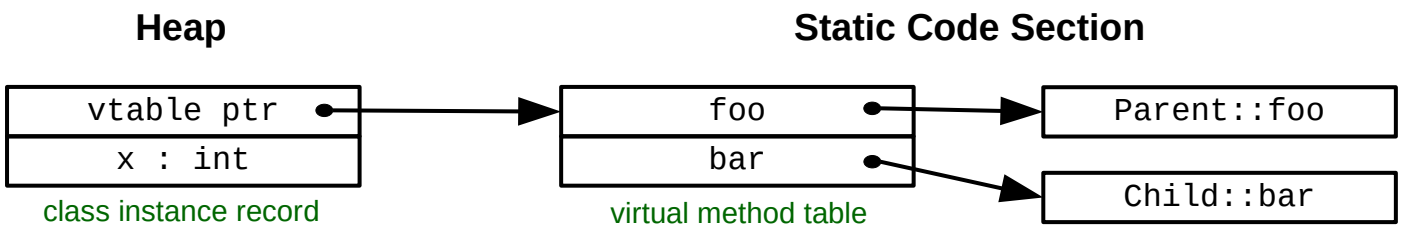

Object-oriented implementation

```
public class A {
    public int x, y;
    public void draw() { … }
    public int area() { … }
}

a = new A();
```

```
public class B extends A {
    public int z;
    public void draw() { … }
    public void sift() { … }
}

b = new B();
```

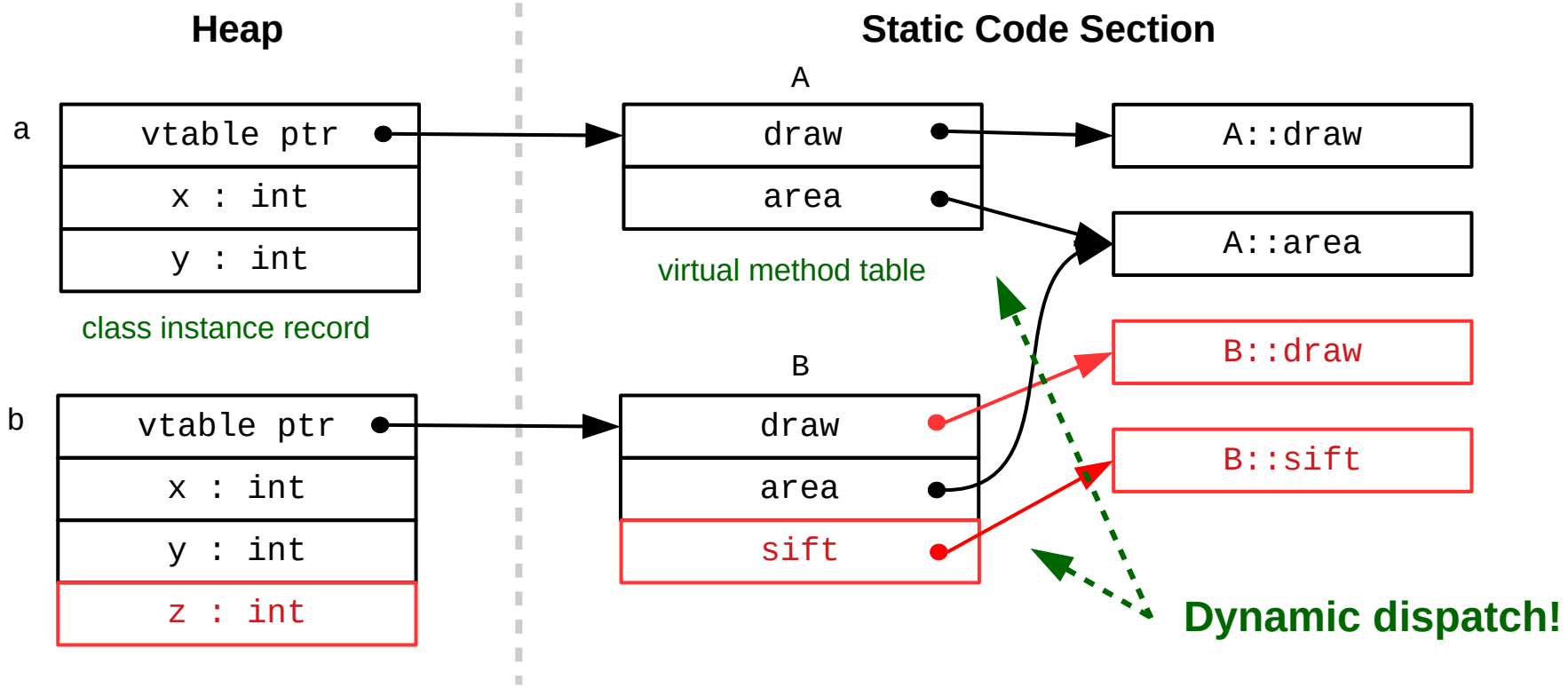

Single vs. Multiple Dispatch

(Java-like Code)

```
class A {
    public void foo(A a) { System.out.println("A::foo(A)"); }
    public void foo(B b) { System.out.println("A::foo(B)"); }
}

class B extends A {
    public void foo(A a) { System.out.println("B::foo(A)"); }
    public void foo(B b) { System.out.println("B::foo(B)"); }
}

A a1 = new A();
B b1 = new B();
A a2 = b1;
```

	SINGLE DISPATCH	MULTIPLE DISPATCH
a1.foo(a1);	*A::foo(A)*	*A::foo(A)*
b1.foo(a1);	*B::foo(A)*	*B::foo(A)*
a1.foo(b1);	*A::foo(B)*	*A::foo(B)*
b1.foo(b1);	*B::foo(B)*	*B::foo(B)*
a1.foo(a2);	*A::foo(A)*	*A::foo(B)*
b1.foo(a2);	*B::foo(A)*	*B::foo(B)*
a2.foo(a2);	*B::foo(A)*	*B::foo(B)*

Visitor example

```
typedef struct {
    int loop_count;
} CountLoopsData;

#define DATA ((CountLoopsData*)(visitor->data))

void CountLoopsVisitor_previsit_program
        (NodeVisitor* visitor, ASTNode* node)
{
    DATA->loop_count = 0;
}

void CountLoopsVisitor_previsit_whileloop
        (NodeVisitor* visitor, ASTNode* node)
{
    DATA->loop_count++;
}

void CountLoopsVisitor_postvisit_program
        (NodeVisitor* visitor, ASTNode* node)
{
    printf("%d\n", DATA->loop_count);
}
```

Visitor example

```
NodeVisitor* CountLoopsVisitor_new ()
{
    NodeVisitor* v = NodeVisitor_new();
    v->data = malloc(sizeof(CountLoopsData));
    v->dtor = free;
    v->previsit_program   = CountLoopsVisitor_previsit_program;
    v->previsit_whileloop = CountLoopsVisitor_previsit_whileloop;
    v->postvisit_program  = CountLoopsVisitor_postvisit_program;
    return v;
}
```

In main.c:

```
    NodeVisitor_traverse_and_free(CountLoopsVisitor_new(), tree);
```

Decaf Project

- Project 2 (parser)
  - `NodeVisitor` (blank)
  - `PrintVisitor`
  - `GenerateASTGraph`
  - `SetParentVisitor`
  - `CalcDepthVisitor`
- Project 3 (analysis)
  - `PrintSymbolsVisitor`
  - `BuildSymbolTablesVisitor`
  - Your static analysis (custom `NodeVisitor`)
- Project 4 (code gen)
  - Your code generator (custom `NodeVisitor`)