CS 432
Fall 2020

Mike Lam, Professor

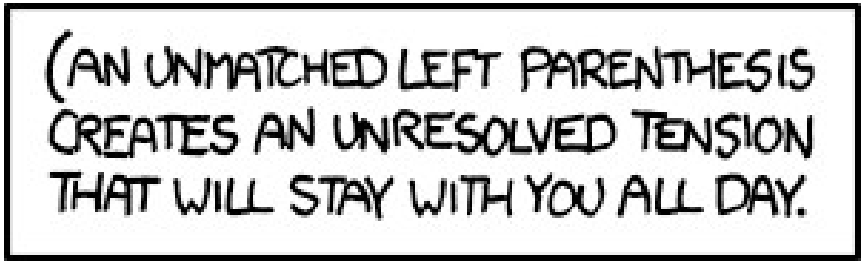

https://xkcd.com/859/

Bottom-Up (LR) Parsing

Compilation

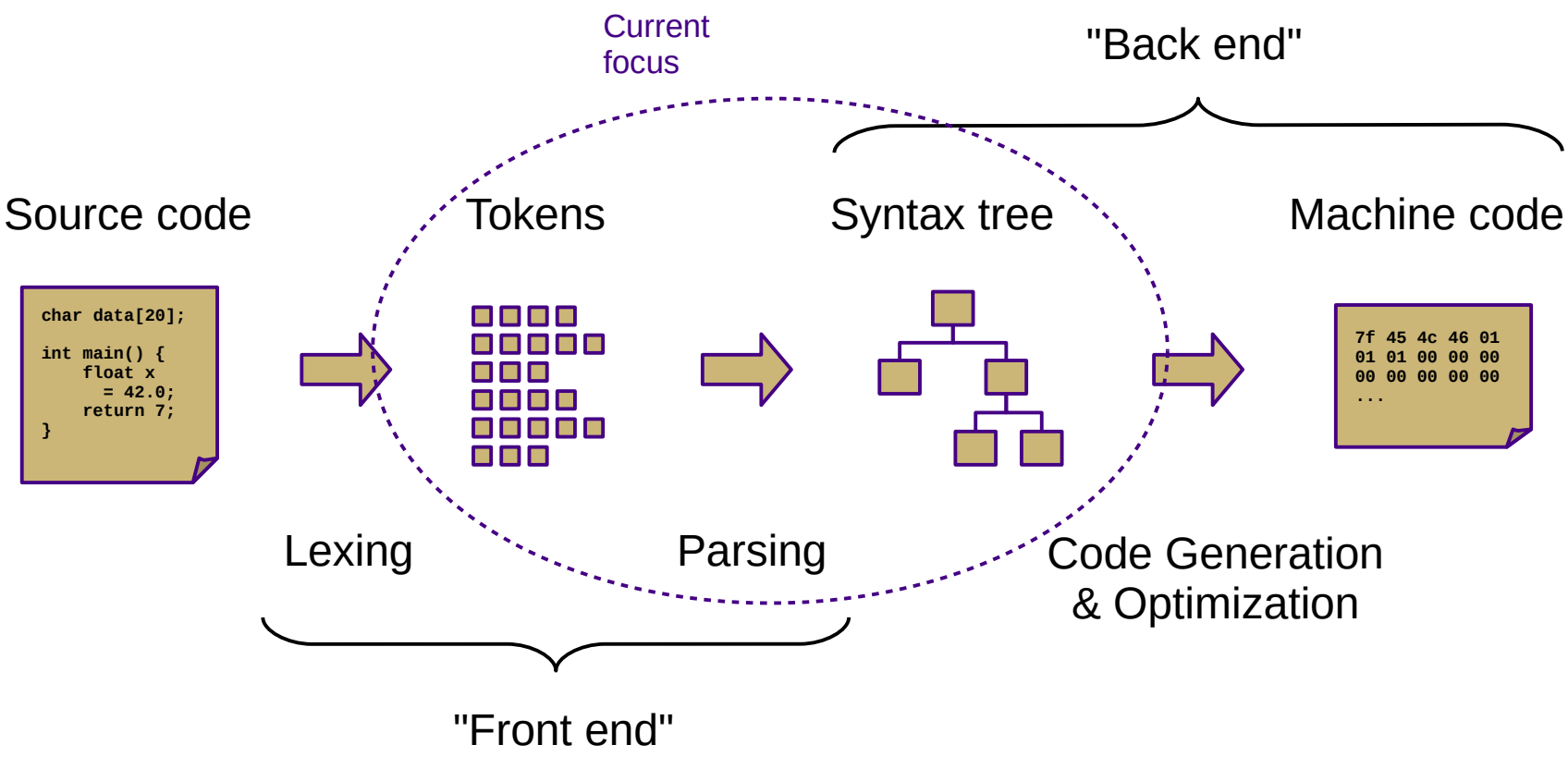

Overview

- Two general parsing approaches
  - Top-down: begin with start symbol (root of parse tree), and gradually expand non-terminals
  - Bottom-up: begin with terminals (leaves of parse tree), and gradually connect using non-terminals

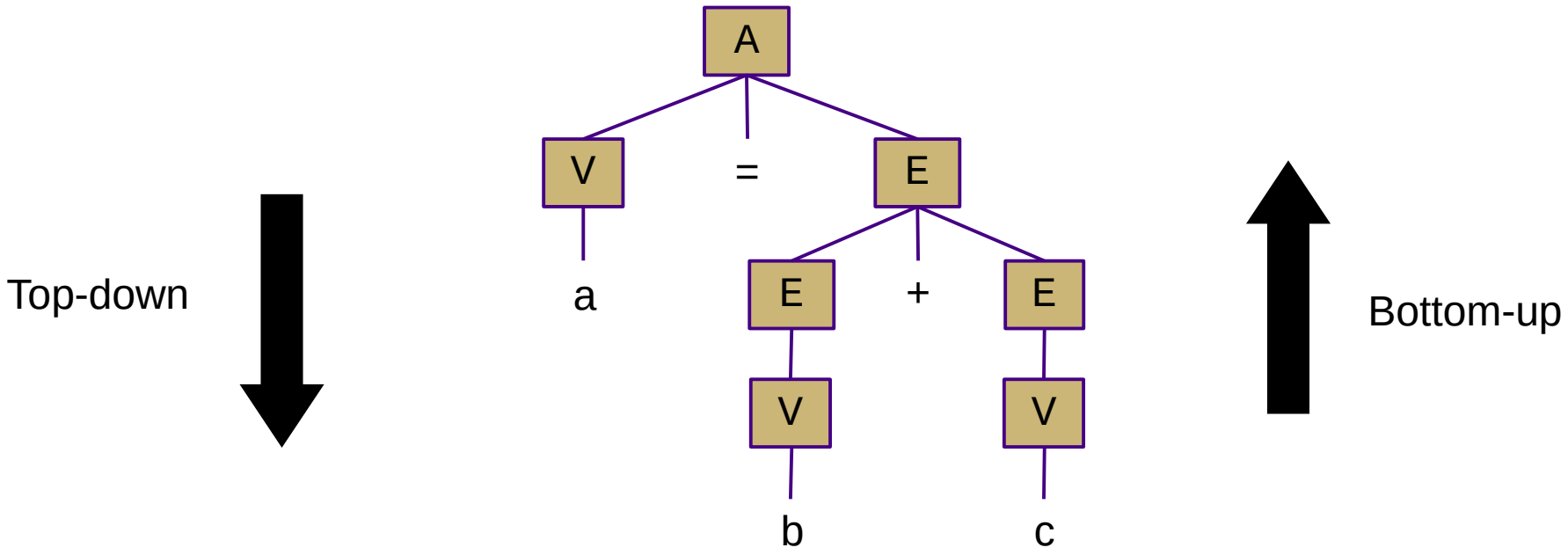

Shift-Reduce Parsing

- Top-down (LL) parsers
  - Left-to-right scan, Leftmost derivation
  - Recursive routines, one per non-terminal (*recursive descent*)
  - Implicit stack (system call stack)
  - Requires more restrictive grammars
  - Simpler to understand and possible to hand-code
- Bottom-up (LR) parsers
  - Left-to-right scan, (reverse) Rightmost derivation
  - "Shift"/push terminals and non-terminals onto a stack
  - "Reduce"/pop to replace *handles* with non-terminals
  - Less restrictive grammars
  - Harder to understand and nearly always auto-generated
  - Very efficient

Shift-Reduce Parsing

-
  - shift 'a'
- <u>a</u>
  - reduce (V → a)
- V
  - shift '='
- V =
  - shift 'b'
- V = <u>b</u>
  - reduce (V → b)
- V = <u>V</u>
  - reduce (E → V)
- V = E
  - shift '+'
- V = E +
  - shift 'c'
- V = E + <u>c</u>
  - reduce (V → c)
- V = <u>E + V</u>
  - reduce (E → E + V)
- <u>V = E</u>
  - reduce (V = E)
- A
  - accept

(handles are underlined)

shift = push, reduce = popN

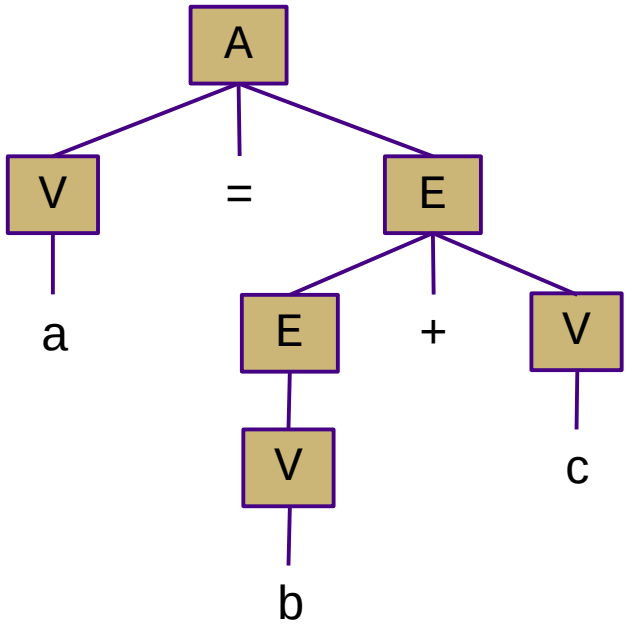

A → V = E
E → E + V
| V
V → a | b | c

LR Parsing

- LR(1) grammars and parsers
  - **Left-to-right** scan of the input string
  - **Rightmost** derivation
  - **1 symbol** of lookahead
  - Less restricted form of context-free grammar
    - Support for most language features
    - Efficient parsing

Context-Free Hierarchy

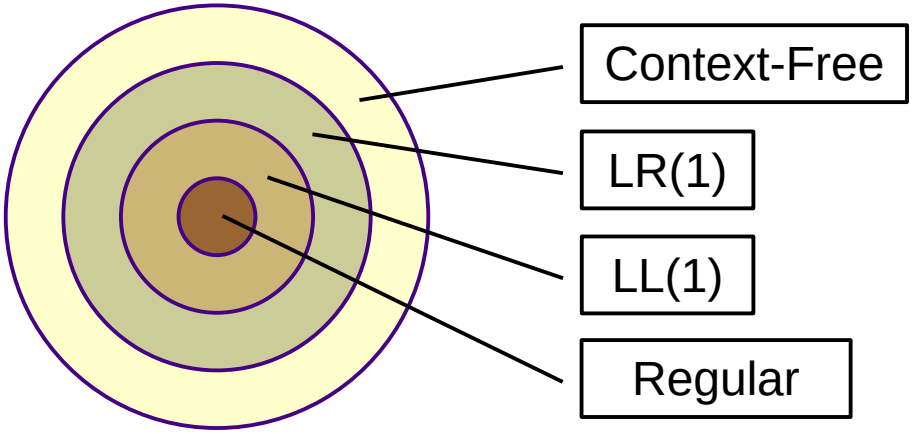

LR Parser Variants

- LR(k) – multiple lookaheads (not necessary)
- LR(1) – single lookahead (*EAC covers this!*)
  - Very general and very powerful
  - Lots of item sets; tedious to construct by hand
  - Overkill for most practical languages
- LALR(1) – special case of LR(1) that merges some states
  - Less powerful, but easier to manage
- **SLR(1)** – special case of LR(1) w/o explicit lookahead (*Dragon book covers this!*)
  - Uses **FOLLOW** sets to disambiguate
  - Even less powerful, but much easier to understand
  - Slightly counterintuitive: all LR(1) languages have SLR(1) grammars
    - So SLR(1) is sufficiently general for our purposes
    - Use LR(0) item sets and generate SLR(1) ACTION/GOTO tables
- LR(0) – no lookahead
  - Severely restricted; most "interesting" grammars aren't LR(0)

LR Parsing

- Creating an LR parser (pushdown automaton)
  - Build item sets
    - An item uses a dot (•) to represent parser status: "A → a • S b"
      - Dots on the left end: "possibilities"
      - Dots in the middle: "partially-complete"
      - Dots on the right end: "complete"
    - Item sets represent multiple parser states (build by taking closure)
      - Similar to NFA state collections in subset construction
  - Build **ACTION** / **GOTO** tables
    - Encodes stack and transition decisions (like δ in FA)
    - **ACTION**(state, terminal) = { *shift/push*, *reduce/pop*, *accept* }
    - **GOTO**(state, non-terminal) = state

LR(0) Item Sets

- LR(0) item sets and automaton
  - Start with an item representing "• S" or "S' → • S"
    - The latter is an augmented grammar
    - The Dragon book uses it; the online tool doesn't
  - Take the closure to add more states if the dot lies immediately to the left of a non-terminal
    - (Non-kernel items, denoted here in blue)
  - Form new sets by "moving the dot" (and take the closure)
  - Convert to finite automaton for recognizing handles by adding transitions
    - Each set becomes a state
    - "Moving the dot" = state transition + stack push

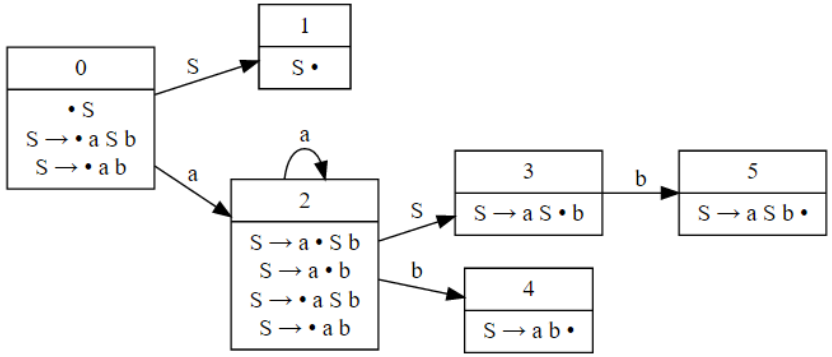

S → a S b
| a b

I_0: • S
S → • a S b
S → • a b

I_1: S •

I_2: S → a • S b
S → a • b
S → • a S b
S → • a b

I_3: S → a S • b

I_4: S → a b •

I_5: S → a S b •

SLR(1) Tables

- Create **ACTION** and **GOTO** tables
  - For each item set i
    - If an item matches **A → β • c γ**
      - **ACTION**(i, c) = "shift" to corresponding item set ("move the dot")
    - If an item matches **A → β •**
      - **ACTION**(i, x) = "reduce A → β" for all x in **FOLLOW**(A) (“backtrack in FA”)
    - If an item matches **A → β • B γ**
      - **GOTO**(i, B) = corresponding item set ("move the dot")
  - **ACTION**({S •}, $) = "accept"
  - Any empty **ACTION** entry = “error” (usually left blank)

SLR(1) Parsing

- **Push** state 0 onto the stack
- Repeat until next action is `accept` or `error`:
  - Look up next action in **ACTION** table
    - Row is the current state (top of stack)
    - Column is the next input (terminal or $)
  - If action is `shift(s)`:
    - **Push** state s onto stack
    - Consume one token from input
  - If action is `reduce(`**A → β**`)`:
    - **Pop** one state for each terminal or non-terminal in **β**
    - Look up next state in **GOTO** table and **push** it onto the stack
      - Row is new current state (top of stack)
      - Column is **A** (newly-reduced non-terminal)

Example

$$S \rightarrow a\ S\ b \mid a\ b$$

	ACTION			GOTO
State	a	b	$	*S*
0	shift(2)			1
1			accept	
2	shift(2)	shift(4)		3
3		shift(5)		
4		reduce(*S* → a b)	reduce(*S* → a b)	
5		reduce(*S* → a *S* b)	reduce(*S* → a *S* b)	

FOLLOW(S) = { b, $ }

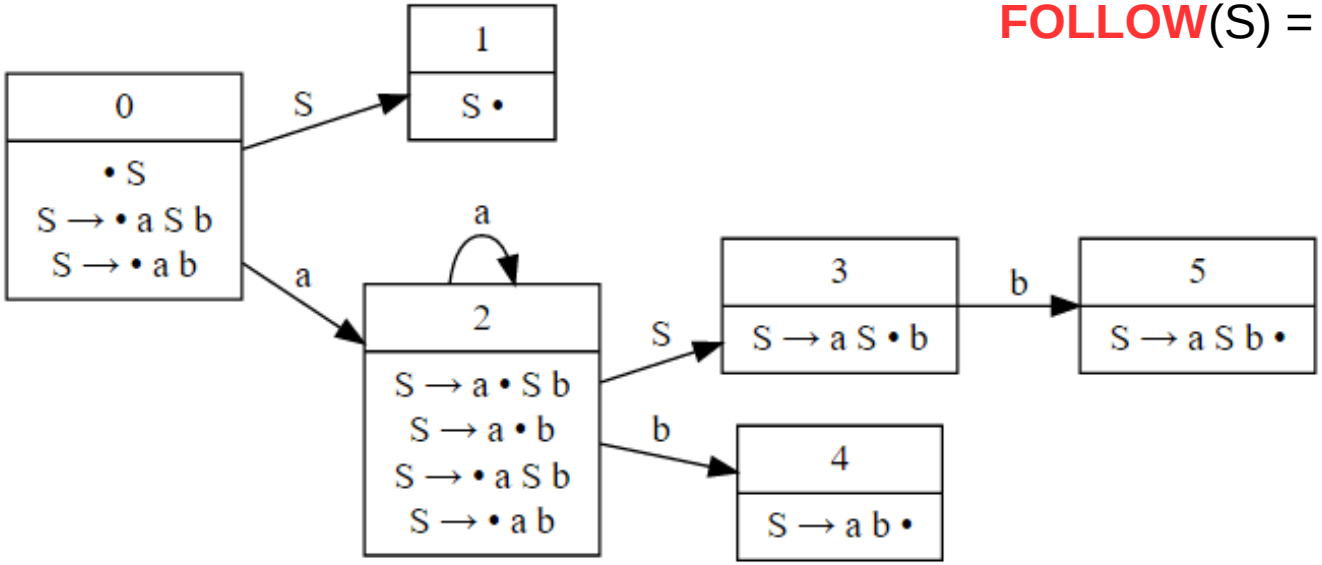

Example

S → a S b
  | a b

	ACTION			GOTO
State	a	b	$	S
0	shift(2)			1
1			accept	
2	shift(2)	shift(4)		3
3		shift(5)		
4		reduce($S \rightarrow$ a b)	reduce($S \rightarrow$ a b)	
5		reduce($S \rightarrow$ a S b)	reduce($S \rightarrow$ a S b)	

Parsing for "a a b b":

Stack	Symbols	Input	Action
$ **0**	$	**a** a b b $	shift(2)
$ 0 **2**	$ a	**a** b b $	shift(2)
$ 0 2 **2**	$ a a	**b** b $	shift(4)
$ 0 2 2 **4**	$ a a b	**b** $	reduce(S → a b)
$ 0 2 **3**	$ a S	**b** $	shift(5)
$ 0 2 3 **5**	$ a S b	**$**	reduce(S → a S b)
$ 0 **1**	$ S	**$**	accept

LR Conflicts

- Shift/reduce
  - Can be resolved by always shifting or by grammar modification
- Reduce/reduce
  - Requires grammar modification to fix

```
A -> V = E
E -> E + V
E -> V
V -> a | b | c
```

Shift/reduce conflict in LR(0)

```
A -> x A x
A ->
```

Shift/reduce conflict (all LR)

```
A -> B | C
B -> x
C -> x
```

Reduce/reduce conflict (all LR)

Observation: none of these languages are LL(1) either!