CS 261
Fall 2020

Mike Lam, Professor

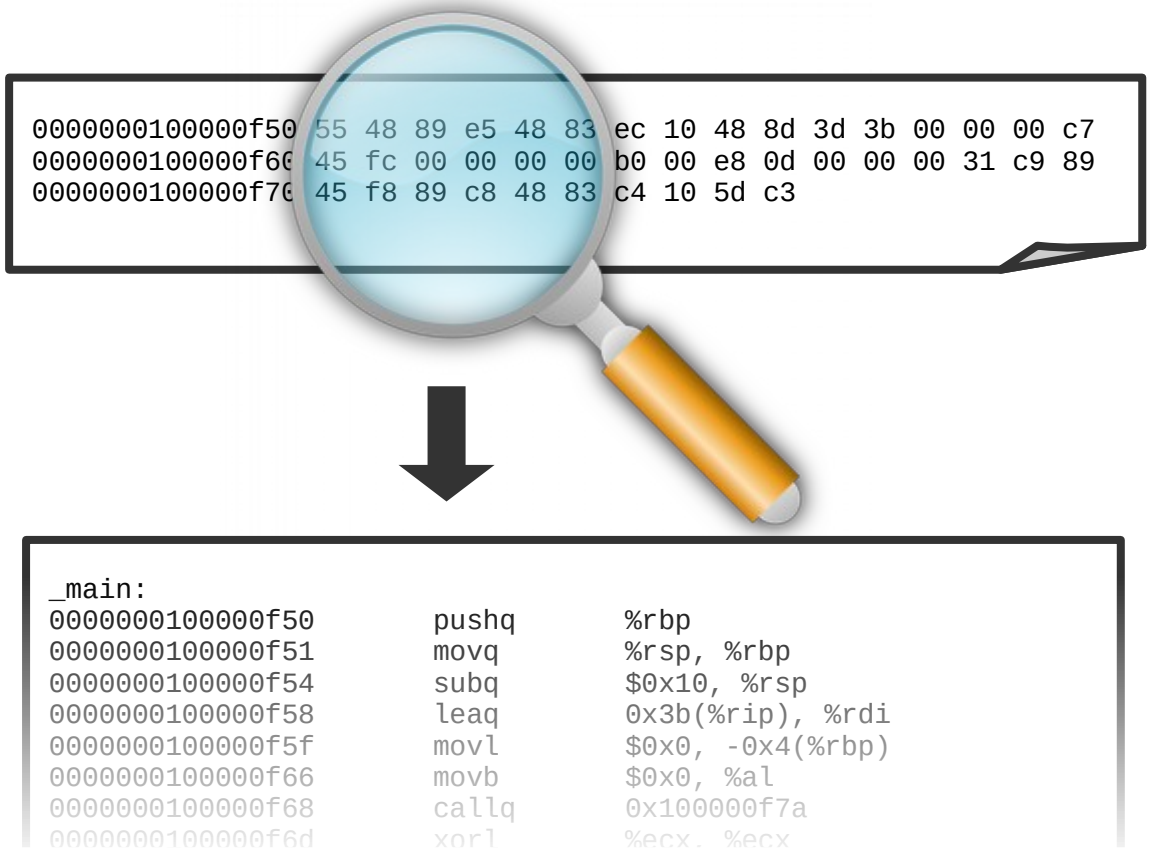

Machine and Assembly Code

x86-64 Introduction

Topics

- Architecture/assembly intro
- Operands
- Basic opcodes

Computer systems

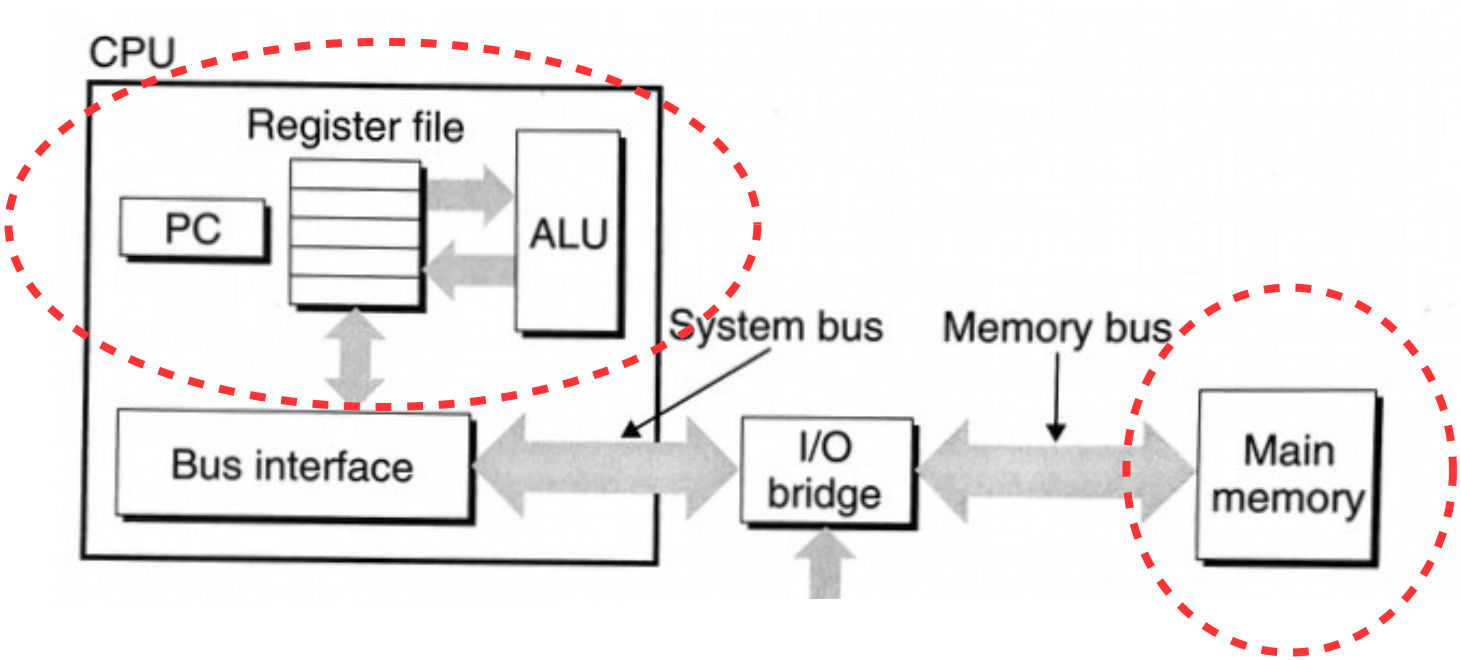

Let's focus for now on the single-CPU components

von Neumann architecture

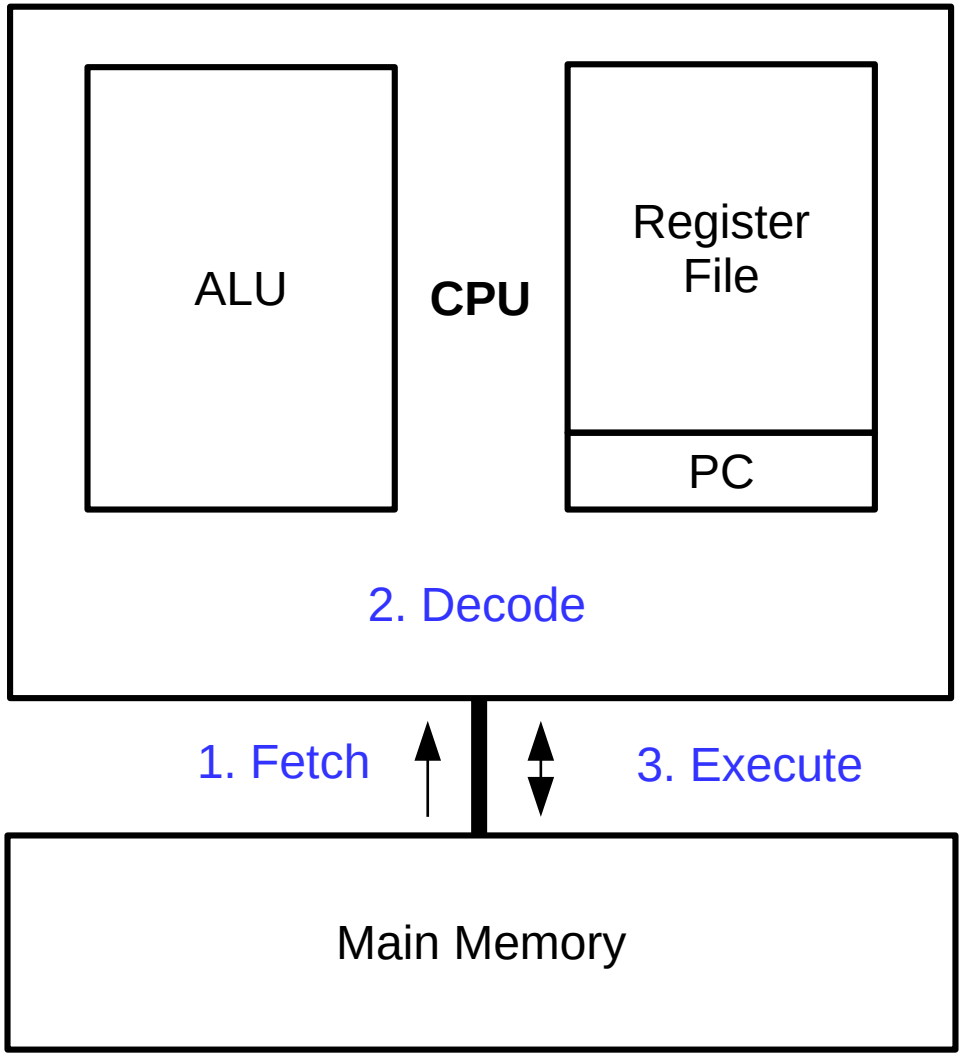

(repeat)

Machine code

- Machine code instruction
  - Variable-length binary encoding of **opcodes** and *operands*
  - Program (instructions) stored in memory along with data
  - Specific to a particular CPU architecture (e.g., x86-64)
  - Looks very different than the original C code!

```
int add (int num1, int num2)
{
    return num1 + num2;
}
```

```
0000000000400606 <add>:
  400606:       55
  400607:       48 89 e5
  40060a:       89 7d fc
  40060d:       89 75 f8
  400610:       8b 55 fc
  400613:       8b 45 f8
  400616:       01 d0
  400618:       5d
  400619:       c3
```

Machine code

- Instructions are specified by an instruction set architecture (ISA)
  - x86-64 (x64) is the current dominant workstation/server architecture
    - Enormous and complex; lots of legacy features and support for previous ISAs
    - We'll learn a bit of it now, then later focus on a simplified form called Y86
  - ARM is used in embedded and mobile markets
  - POWER is used in the high-performance market (supercomputers!)
  - RISC-V is used in CPU research (and is growing in the industrial market)

```
0000000000400606 <add>:
  400606:       55
  400607:       48 89 e5
  40060a:       89 7d fc
  40060d:       89 75 f8
  400610:       8b 55 fc
  400613:       8b 45 f8
  400616:       01 d0
  400618:       5d
  400619:       c3
```

Assembly code

- Assembly code: human-readable form of machine code
  - Each indented line of text represents a single machine code instruction
    - Two main x86-64 formats: Intel and AT&T (we'll use the latter)
    - Use "#" to denote comments (extends to end of line)
  - Generated from C code by compiler (not a simple process!)
  - Disassemblers like `objdump` can extract assembly from an executable
  - Understanding assembly helps you to debug, optimize, and secure your programs

```
0000000000400606 <add>:
  400606:       55                      push   %rbp
  400607:       48 89 e5                mov    %rsp,%rbp
  40060a:       89 7d fc                mov    %edi,-0x4(%rbp)
  40060d:       89 75 f8                mov    %esi,-0x8(%rbp)
  400610:       8b 55 fc                mov    -0x4(%rbp),%edx
  400613:       8b 45 f8                mov    -0x8(%rbp),%eax
  400616:       01 d0                   add    %edx,%eax
  400618:       5d                      pop    %rbp
  400619:       c3                      retq
```

Assembly code

- Assembly provides low-level access to machine
  - Program counter (PC) tracks current instruction
    - Like a bookmark; also referred to as the instruction pointer (IP)
  - Arithmetic logic unit (ALU) executes **opcode** of instructions
    - Today, we'll focus on some very basic opcodes
  - Register file & main memory store *operands*
    - Registers are faster but main memory is larger

```
0000000000400606 <add>:
  400606:       55
  400607:       48 89 e5
  40060a:       89 7d fc
  40060d:       89 75 f8
  400610:       8b 55 fc
  400613:       8b 45 f8
  400616:       01 d0
  400618:       5d
  400619:       c3
```

opcode operands

```
push   %rbp
mov    %rsp,%rbp
mov    %edi,-0x4(%rbp)
mov    %esi,-0x8(%rbp)
mov    -0x4(%rbp),%edx
mov    -0x8(%rbp),%eax
add    %edx,%eax
pop    %rbp
retq
```

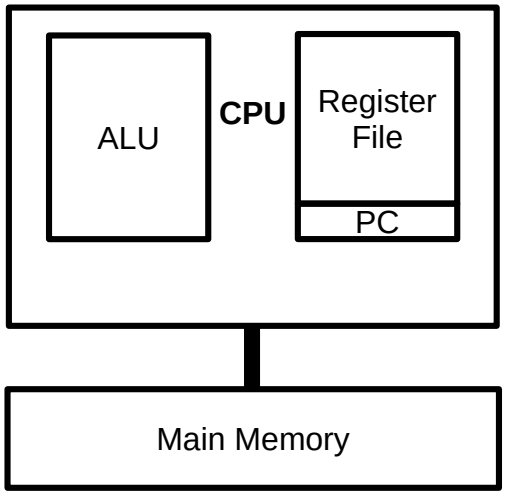

Operand types

- Immediate
  - Operand value embedded in instruction itself
  - Extends the size of the instruction by the width of the value
  - Written in assembly using “$” prefix (e.g., `$42` or `$0x1234`)
- Register
  - Operand stored in register file
  - Accessed by register number
  - Written in assembly using name and “%” prefix (e.g., `%eax` or `%rsp`)
- Memory
  - Operand stored in main memory
  - Accessed by effective address calculated from instruction components
  - Written in assembly using a variety of addressing modes

Registers

- General-purpose
  - **%rax**, **%rbx**, **%rcx**, and **%rdx**
  - **%rsi** and **%rdi**
  - Legacy name meanings (e.g., “%r**a**x” as the **a**ccumulator) are less important for us
    - But for now, note that %rax is also used to store the return value of a function
- Special
  - **%rip**: instruction pointer
    - This is the PC on x86-64
  - **%flags**: status info
    - "Condition codes" in CS:APP
  - **%rbp**: base pointer
  - **%rsp**: stack pointer

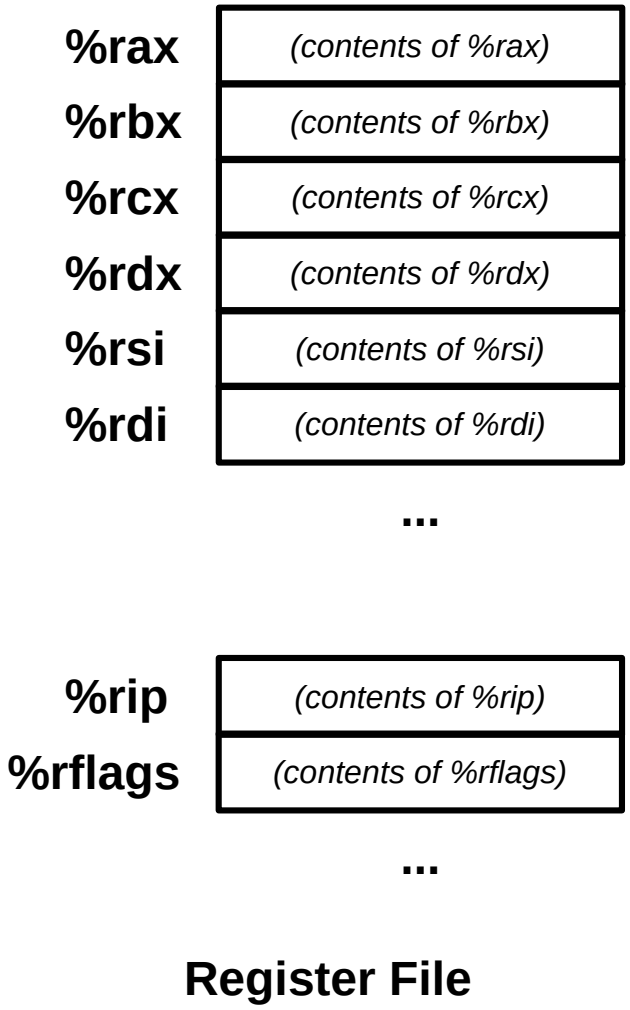

Memory addressing modes

R[**reg**] = value of register **reg**

- Absolute: ***addr***
  - Effective address: ***addr***
- Indirect: (***reg***)
  - Effective address: **R**[***reg***]
- Base + displacement: ***offset***(***reg***)
  - Effective address: ***offset*** + **R**[***reg***]
- Indexed: ***offset***(reg_{base}, reg_{index})
  - Effective address: ***offset*** + **R**[reg_{base}] + **R**[reg_{index}]
- Scaled indexed: ***offset***(reg_{base}, reg_{index}, ***s***)
  - Effective address: ***offset*** + **R**[reg_{base}] + **R**[reg_{index}] · ***s***
  - Scale (*s*) must be 1, 2, 4, or 8

useful for pointers!

useful for arrays!

(also, note that ***offset*** and reg_{base} are optional here)

Exercise

- Given the following machine status, what is the value of the following assembly operands? (assume 32-bit memory locations)
  - `$42`
  - `$0x10`
  - `%rax`
  - `0x104`
  - `(%rax)`
  - `4(%rax)`
  - `2(%rax, %rdx)`
  - `(%rax, %rdx, 4)`

Registers

Name	Value
%rax	0x100
%rdx	0x2

Memory

Address	Value
0x100	0xFF
0x104	0xAB
0x108	0x13

Exercise

- Given the following machine status, what is the value of the following assembly operands? (assume 32-bit memory locations)
  - `$42` 42
  - `$0x10` 16
  - `%rax` 0x100
  - `0x104` 0xAB
  - `(%rax)` 0xFF
  - `4(%rax)` 0xAB
  - `2(%rax, %rdx)` 0xAB
  - `(%rax, %rdx, 4)` 0x13

Registers

Name	Value
%rax	0x100
%rdx	0x2

Memory

Address	Value
0x100	0xFF
0x104	0xAB
0x108	0x13

Question

- In x86-64, assume the %rax register stores the address of the data you want to access. Which of the following operand specifiers could NOT be used to access the data?
  - A) `%rax`
  - B) `(%rax)`
  - C) `0(%rax)`
  - D) `(,%rax,1)`
  - E) `0(,%rax,1)`

Basic x86-64 instructions

- Data movement: "`mov`"
  - **Copies** data from first operand to second operand
    - E.g., `mov $1, %rax` will set the value of %rax to 1
- Arithmetic: "`add`", "`sub`", "`imul`"
  - Performs operation, saving result in **second** operand
    - E.g., `add %rcx, %rax` will add the value of %rcx to the value of %rax
    - (Note lack of division)
- Bitwise: "`and`", "`or`", "`xor`"
  - Performs operation, saving result in **second** operand
    - E.g., `xor %rcx, %rax` will XOR the values of %rcx and %rax, saving the result in %rax

Basic x86-64 instructions

- Control flow: change the PC with `jmp` (%rip cannot be set directly)
  - Label (name followed by ":") marks a location in code that can be "jumped to"
    - E.g., "`foo:`"
  - **jmp**: **Jump** to a given label
    - E.g., `jmp foo` will "jump to" label "foo"

- Conditionals: "`cmp`" followed immediately by "`je`" or "`jne`"
  - **cmp: Compares** operand values
  - **je**: If the values were **equal**, jump to a label
    - E.g., `cmp %rax, $0` followed by `je foo` will jump to label "foo" if the value of %rax was zero
  - **jne**: If the values were **not equal**, jump to a label
    - E.g., `cmp %rax, $0` followed by `jne foo` will jump to label "foo" if the value of %rax was NOT zero

Question

- What is the value of %rax after these instructions execute?

```
        mov $5, %rcx
        and $0, %rax
        cmp $0, %rcx
        je skip
        add %rcx, %rax
    skip:
        sub $1, %rax
```

  - A) 0
  - B) 1
  - C) 4
  - D) 5
  - E) Cannot be determined

Hand-writing x86_64 assembly

- Minimal template (returns 0; known to work on stu):

```
.globl main          # makes "main" a global symbol
main:                # execution will start here

    mov $0, %rax     # your code goes here

    ret              # "return from "main"
```

- Save in .s file and build with gcc as usual (don't use "-c" flag)
  - Run program and view return value (final value of %rax) in bash with "echo $?"
- Use gdb to trace execution
  - `start`: begin execution and pause at main
  - `disas`: print disassembly of current function
  - `ni`: next instruction (step over function calls)
  - `si`: step instruction (step into function calls)
  - `p/x $rax`: print value of RAX (note "$" instead of "%")
  - `info registers`: print values of all registers